HVAC INSTALLATION, OPERATION MAINTENANCE MANUALS (IOM):

Project: On Broadway

Architect: Bjerke Architects

Engineer: Dawe's Engineering and Design

Contractor: Sleeping Giant Mechanical

Manufacturers Rep: S. Conley Sales, Inc.

384 Gallatin Park Dr. Suite 201, Bozeman, MT 59715, Ph 406.585.7333 Fax 585.7666

IOM Table of Contents:

Kitchen Equipment

Dryer Booster Fan

Exhaust Fans

Make Up Air Unit

384 Gallatin Park Dr. Suite 201, Bozeman, MT 59715
(O) 406.585.7333 (F) 406.585.7666

On Broadway

Kitchen Hoods

Kitchen Hoods – Captive Aire

Model: TAG: KH-1 - Captive Aire Model 4824ND-2-PSP-F

Model: TAG: KH-2 - Captive Aire Model 4224VHB-G-REM

TAGs: KH-1 & KH-2

Commercial Kitchen Hoods

Installation, Operation, and Maintenance Manual

RECEIVING AND INSPECTION

Upon receiving unit, check for any interior and exterior damage, and if found, report it immediately to the carrier. Also check that all accessory items are accounted for and are damage free.

WARNING!!

Installation of this unit should only be performed by a qualified professional who has read and understands these instructions and is familiar with proper safety precautions. Read this manual thoroughly before installing or servicing this equipment.

Save these instructions. This document is the property of the owner of this equipment and is required for future maintenance. Leave this document with the owner when installation or service is complete.

A0011051
February 2019 Rev. 25

TABLE OF CONTENTS

WARRANTY 4
CERTIFICATIONS AND PATENTS 4
Listing 4
Patents 4
INSTALLATION 5
Site Preparation 5
Clearance Reduction Methods 6
Installation of a Single Hood (Wall or Island) 7
Hanging Angle Assembly Instructions 10
Side View of Typical Hood 11
End-to-End Hoods 12
Hanging Detail for Multiple Hood Models Hung End-to-End 12
Hood Connection Detail for Multiple Hood Models 13
Back-to-Back Hoods 14
Guidelines for Ductwork Installation 15
Installation of Hood Accessories 16
Back Return Installation 16
Section View of Typical Hood with Back Return 17
Bolt-Together Standoff Installation 18
Single PSP/AC-PSP Installation 19
Multiple PSP/AC-PSP Installation 20
Wrapper (Enclosure Panel) Installation 22
End Panel Installation 26
Quarter End Panel Installation 27
Insulated End Panel Installation 28
Vertical End Panel Installation 29
Backsplash Installation 30
Insulated Backsplash Installation 31
Pizza Oven Top Mount Flange Installation 32
Plate Shelf Option Installation 33
Continuous Capture 34
Utility Cabinet 35
OPERATION 36
Performance Evaluation 36
Guidelines before Beginning 36
External Factors which may affect Hood Performance 37
Using a Shortridge Instrument 37
Calculating Make-up Air CFM 38
Calculating Exhaust Air CFM 38
Adjustments 39
Conclusion 39
Complete Equipment List for Performance Evaluations 39
Troubleshooting 40
Troubleshooting Chart 40
MAINTENANCE 41
General Maintenance 41
Daily Maintenance 41
Quarterly Maintenance 41
PSP/AC-PSP Perforated Screen Cleaning and Maintenance 42
Recommended Cleaning Agents 42
Start-Up and Maintenance Documentation 44
Job Information 44
Hood Information 44
Maintenance Record 44
Factory Service Department 44

WARRANTY

This equipment is warranted to be free from defects in materials and workmanship, under normal use and service, for a period of 24 months from date of shipment. This warranty shall not apply if:

1. The equipment is not installed by a qualified installer per the MANUFACTURER'S installation instructions shipped with the product.
2. The equipment is not installed in accordance with federal, state and local codes and regulations.
3. The equipment is misused or neglected, or not maintained per the MANUFACTURER'S maintenance instructions.
4. The equipment is not operated within its published capacity.
5. The invoice is not paid within the terms of the sales agreement.

The MANUFACTURER shall not be liable for incidental and consequential losses and damages potentially attributable to malfunctioning equipment. Should any part of the equipment prove to be defective in material or workmanship within the 24 month warranty period, upon examination by the MANUFACTURER, such part will be repaired or replaced by MANUFACTURER at no charge. The BUYER shall pay all labor costs incurred in connection with such repair or replacement. Equipment shall not be returned without MANUFACTURER'S prior authorization and all returned equipment shall be shipped by the BUYER, freight prepaid to a destination determined by the MANUFACTURER.

CERTIFICATIONS AND PATENTS

Listing

This hood is ETL-listed to standard UL710, ULC710, and ULC-S646 when installed in accordance with these installation instructions and National Fire Protection Association Standard "NFPA 96, Standard for Ventilation Control and Fire Protection of Commercial Cooking Operations."

Patents

The dual supply plenum controlling Make-Up Air and Air Conditioned Air is covered under the following patents: System for Directing and Controlling Two Separate Streams of Air to a Kitchen: United States Patent No. 7963830 B2; Canadian Patent No. CA2820509; Patent No. CA2520330

Exhaust Hoods are covered under the following patent: Kitchen Exhaust Hood Assembly having Components secured together by Threaded Studs: Canadian Patent No. CA2520435C

INSTALLATION

It is imperative that this unit is installed and operated with the designed airflow, filters and construction in accordance with this manual. If there are any questions about any items, please call the service department at **1-866-784-6900** for warranty and technical support issues.

WARNING: IMPROPER INSTALLATION, ADJUSTMENT, ALTERATION, SERVICE OR MAINTAINANCE CAN CAUSE PROPERTY DAMAGE, INJURY OR DEATH. READ THE INSTALLATION, OPERATION AND MAINTENANCE INSTRUCTIONS THOROUGHLY BEFORE INSTALLING OR SERVICING THIS EQUIPMENT.

Site Preparation

1. Provide clearance around installation site to safely rig and lift equipment into its final position. Consider general service and installation space when locating unit.
2. Locate unit close to the space it will serve to reduce long, twisted duct runs.
3. Thoroughly review the plans and specifications of the project.
4. Determine the exact location in which the cooking hood will be installed and verify that there are no interferences which will prevent proper installation.
5. Verify that all overhead beams and angles are structurally strong enough to support the weight of the hood and hanging system. It is often necessary to strengthen existing structural beams, as they are not designed to carry the weight of a stainless steel hood. Refer to the project submittal drawing for hood weight(s). It may also be necessary to create a support structure suspended from the ceiling joists to better align with the desired hood location.
6. Determine if adequate room is available to install the hood and all ductwork with proper clearances from combustible material. IMC, NFPA96 and local authorities having jurisdiction call for a minimum clearance (typically 18 inches for type 1, grease rated hoods) between the cooking hood(s), exhaust ducts, and building materials which are combustible. However, IMC and NFPA96 outline acceptable clearance reduction methods; **most authorities accept the clearance reduction methods approved in the manufacturer's ETL listing for Type 1, grease rated hoods. Refer to Figure 1**. It is important to check with the local authority having jurisdiction to determine that the installation method is satisfactory to meet their requirements prior to installing the equipment.

FOLLOW SMACNA GUIDES AND RECOMMENDATIONS FOR THE HANGING AND INSTALLATION OF HOODS.

Clearance Reduction Methods

Clearance reduction methods have been evaluated and tested and are certified by ETL. The method of test was derived from UL 710 with temperature criteria taken from appropriate standards.

The hood may be installed with a 0 inch clearance to combustible materials per ETL if constructed in one of the following methods:

- 1 inch thick min. layer of insulation of type Owens Corning Type 475 or Johns Manville Type 475 or listed kitchen exhaust duct insulation.
- 1 inch thick min. insulated backsplash. Insulation of type listed above.
- Back Return (BR) supply plenum with 1 inch thick min. insulation of type listed above.

To comply with the ETL certification, the cooking appliance must be located:

- At least 6 inches from the rear wall.
- At least 24 inches below the bottom edge of the hood.
- Cooking surface must not exceed temperatures above 700°F.

The hood may be installed with a 3 inch clearance to limited combustible materials per NFPA96 if constructed in one of the following methods:

- 3 inch factory installed rear un-insulated standoff.
- 3 inch factory installed top wrapper or enclosure panel system.
- 3 inch factory installed end standoff.
- Any insulated surface on the hood can be in contact with a combustible wall or structure.
- Hood surfaces perpendicular to combustible walls or structures do not need to be insulated to maintain the zero inch clearance rating.
- Only the surface of the hood against a combustible wall or structure must be insulated.

For example, on a combustible back wall, only the back of the hood needs to be insulated, even if the back wall extends beyond the back of the hood in any direction.

Figure 1 – Clearance Reduction Options

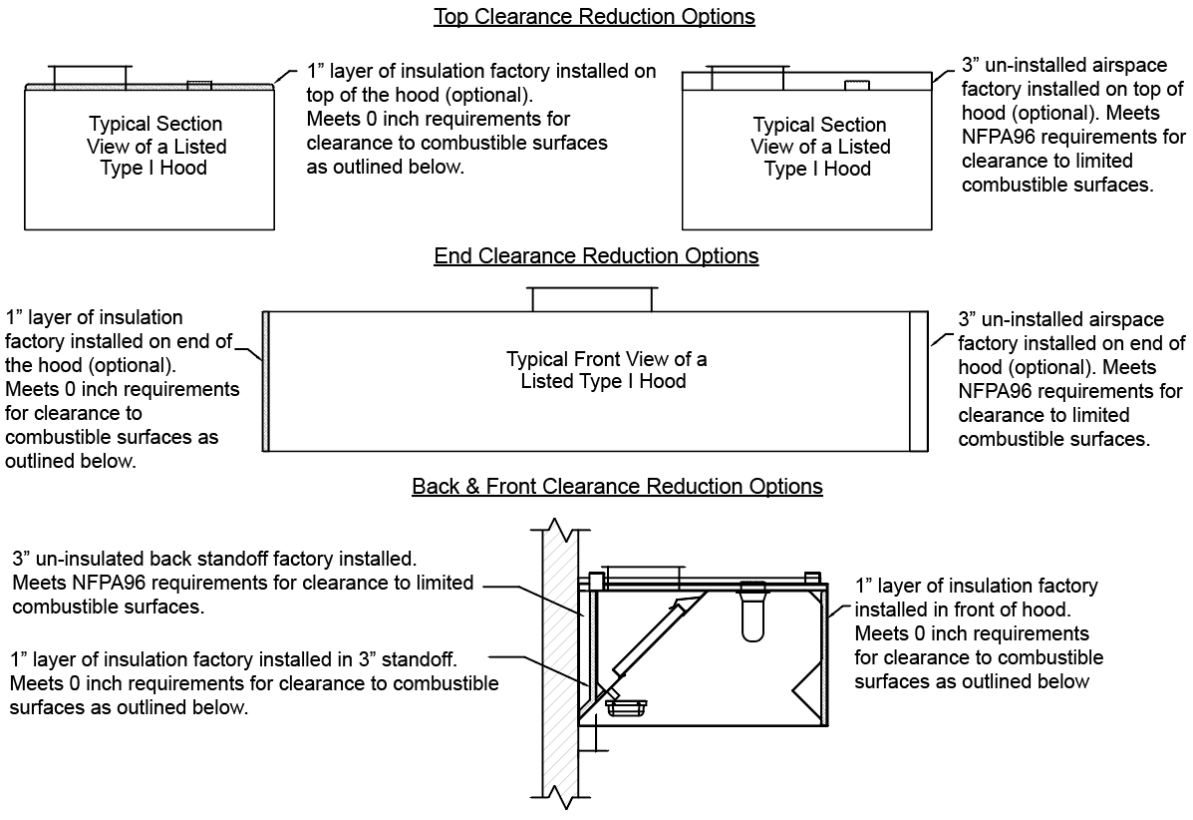

Installation of a Single Hood (Wall or Island)

The following is a step-by-step procedure for installation of the ventilation hood.

NOTE: Report any damage to the delivering freight carrier and file a claim if appropriate.

1. Uncrate the hood, being very careful not to dent or scratch the outer surface. Refer to the installation drawing for typical details of the ventilation system prior to hanging the hood. Check the nameplate on the equipment to make certain it meets the specifications provided by the architect and/or engineer. **If discrepancies exist, notify the manufacturer immediately**.

   The nameplate will also give information regarding the following:
   - Clearance from cooking surface to front lower edge of the hood
   - Minimum exhaust air flow
   - Maximum supply air flow (if applicable)
   - Minimum front overhang from cooking surface
   - Minimum side overhang from cooking surface
   - Maximum cooking surface temperature
   - Replacing fusible links for exhaust and supply damper (if applicable)
   - Replacing filters

2. Determine the height at which the hood will be hung:

   Canopy hoods are typically hung so that the front lower edge of the hood is within 6'-6" to 7'-0" AFF. However, the hood should be hung so that the proper clearance from the cooking surface to the front lower edge of the hood is maintained. See nameplate for clearance from cooking surface to front lower edge of hood. Exact hood hanging height should be verified with local authorities having jurisdiction.

   NOTE: If there are wrappers (enclosure panels) with the order, measure down from the ceiling the height of the wrappers. That will be the top hanging height of the hood as long as the following criteria are met:

   - The front lower edge of the hood is within 6'-6" to 7'-0" AFF,
   - The front lower edge of the hood is within the clearance requirement from the cooking surfaces, and
   - If the hanging height based on wrappers does not fall in this range, contact your local office.

   Backshelf hoods are typically hung at the maximum height allowed from the cooking surfaces. See nameplate for clearance from cooking surface to front lower edge of hood. Exact hood hanging should be verified with local authorities having jurisdiction.

   NOTE: If there are wrappers with the order, measure down from the ceiling the height of the wrappers. That will be the top hanging height of the hood as long as the front lower edge of the hood is within the clearance requirement from the cooking surfaces. If the hanging height based on wrappers does not fall in this range, contact your local office.

3. If the hood has a back return, install it now. See **page 16** for Back Return Installation.

4. If the hood has a bolt-together standoff, install it now. See **page 18** for Bolt-Together Standoff Installation.

5. If the hood has duct thermostats, install them now per the thermostat installation drawing.

6. Position hood on the floor in its approximate final position with the supply and exhaust risers on the hood located directly beneath the corresponding openings in the roof, if possible. It is advisable to finalize the location using a plumb-bob or laser. **Protect the hood when it is on the jacks to avoid dents, scratches, and other damage to the hood**.

WARNING: VERTICALLY OR HORIZONTALLY LAGGING HOODS TO WOODEN JOISTS, TRUSSES, OR STUDS IS AN UNACCEPTABLE METHOD FOR HANGING HOODS. THIS WILL LEAD TO BOTH STRUCTURAL AND THERMAL FAILURE CAUSING INJURY AND/OR DEATH.

7. Proceed to weld exhaust duct to hood while on the floor, if possible.
8. Use 1/2" threaded rod to hang hoods. Drill 9/16" holes in the structural support system or use Unistrut® to line up with the welded-on angle mounting brackets on the hood. There are several types of mounting brackets depending upon the hood type; each, however, has a predrilled hole. See **Figure 2** for details. **The structural integrity of the structural support system is the responsibility of the contractor and the structural engineer.** There are also center hanging angles on hoods 12 feet in length and longer. **Center hanging angles must be used to support the hood weight and prevent filter fit and grease drainage problems**. Some backshelf hoods do not have hanging angles and must be anchored to back wall using the standing flange provided. Structural lag bolts must be used every 12 inches on center maximum and must be secured to studs behind wall. Refer to **Figure 2**.
9. The spacing on the hole for the modified support should line up with the mounting bracket on top of the hood. The top hanger should be 1/2" closer to the back wall than the mounting bracket on the hood to pull the hood against the wall. Refer to **Figure 3**. Some hoods are designed for island installations where a wall is not present.
10. With the hood well protected against possible scratching, raise the hood into position using high lifts or equipment jacks at each end to keep the hood level. When the hood is elevated to the proper height, install 1/2" threaded rod between each mounting bracket on the hood and the modified support. Secure rods with heavy duty nuts and appropriately sized fender washers above and below the hanging angle.
11. Make final adjustments as needed to ensure the hood is hung level. Maintain tension on all rods to ensure the hood weight is evenly distributed. If it is necessary to stand or work on top of the hood, use pieces of plywood to evenly distribute weight on the hood so no damage occurs.
12. Brace hood to ceiling joists and wall(s), as applicable, so that the hood does not move. Secure hood to wall in a manner acceptable to the authority having jurisdiction.
13. If installing a single PSP/AC-PSP to the hood, install it now. See **page 21** for Single PSP/AC-PSP Installation.
14. If the hood has multiple Perforated Supply Plenums (i.e. PSPs) or AC-PSPs, install them now. See **page 19** for Multiple PSP/AC-PSP Installation.
15. Install the exhaust ductwork. The entire exhaust duct system must be continuously welded, liquid tight unless it is Listed Factory Built Grease Duct. The duct must be welded to the hood exhaust collar and the roof curb cap must be welded to the exhaust duct. See **page 15** for Guidelines for Ductwork Installation.
16. Install the supply ductwork. See **page 15** for Guidelines for Ductwork Installation.
17. If the hood is equipped with a control unit, an installation wiring diagram will be provided inside of the control unit. The jobsite electrician is responsible for making the appropriate field connections. This includes all lights and duct/hood mounted thermostats.

    All field wiring on top of the hood must use high temp wire and wire nuts (black). Wiring must be routed through hard or flex conduit. Route and attach all conduit on top of, or above, structural joists (Hat Channel) on top of hood. Conduit cannot contact the surface of the hood ceiling.

18. If the hood is equipped with a factory pre-piped fire suppression system, a certified fire system installer is responsible for completing the field hookup, testing, and certifying the system in accordance with the manufacturer's specifications and the local fire codes. If the hood is not pre-piped, a certified fire system installer is responsible for installing, testing and certifying the system in accordance with the manufacturer's specifications and the local fire codes.
19. If the hood is equipped with wrappers (enclosure panels), end panels, and/or backsplash panels, install them now. See **pages 22** through **31** for Panel Installations.
20. Caulk the lower edge of the hood where it meets the wall. This does not apply to hoods installed in island configurations.
21. Install light bulbs, light globes, and grease filters in the hood.
22. Install grease cups in the brackets/slots provided.
23. Use a stainless steel polish to clean the hood of dust or dirt acquired in transit.
24. It is recommended that the protective plastic sheeting remain on the installed hood until construction is complete, so as to avoid any damage to the equipment.

WARNING: NEVER PUNCTURE THE HOOD GREASE CONTAINMENT AREA TO HANG HOOD OR TO HANG ITEMS FROM HOOD. PUNCTURING THE GREASE CONTAINMENT AREA WILL VOID WARRANTY AND LISTING ON HOOD.

Hanging Angle Assembly Instructions

- Hanging angle must be supported with 1/2" - 13 TPI grade 5 (minimum) all-thread.
- Sandwich hanging angles and ceiling anchor points with 1/2" grade 5 (minimum) steel flat washers and 1/2" - 13 TPI grade 5 (minimum) hex nuts as shown.
- Must use doubled hex nut configuration beneath hood hanging angles and above ceiling anchors (single hex nut beneath hanging angle is only acceptable for full length and PSP hanging angle types).
- Maintain 1/4" of exposed threads beneath bottom hex nut.
- Torque all hex nuts to 57 ft-lbs.

Figure 2 – Hanging Angle Assembly Detail

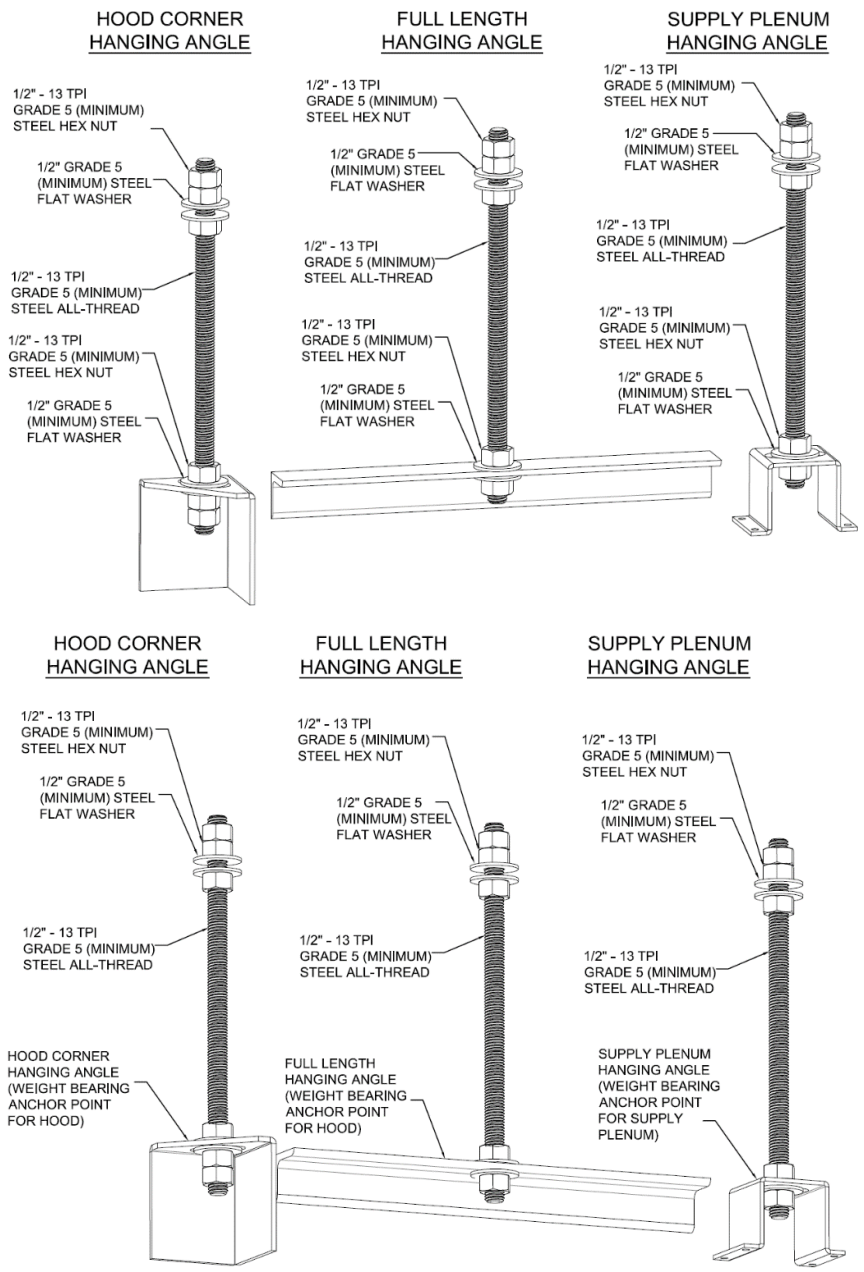

WARNING: VERTICALLY OR HORIZONTALLY LAGGING HOODS TO WOODEN JOISTS, TRUSSES, OR STUDS IS AN UNACCEPTABLE METHOD FOR HANGING HOODS. THIS WILL LEAD TO BOTH STRUCTURAL AND THERMAL FAILURE CAUSING INJURY AND/OR DEATH.

Side View of Typical Hood

Figure 3 – Typical Hood Side View

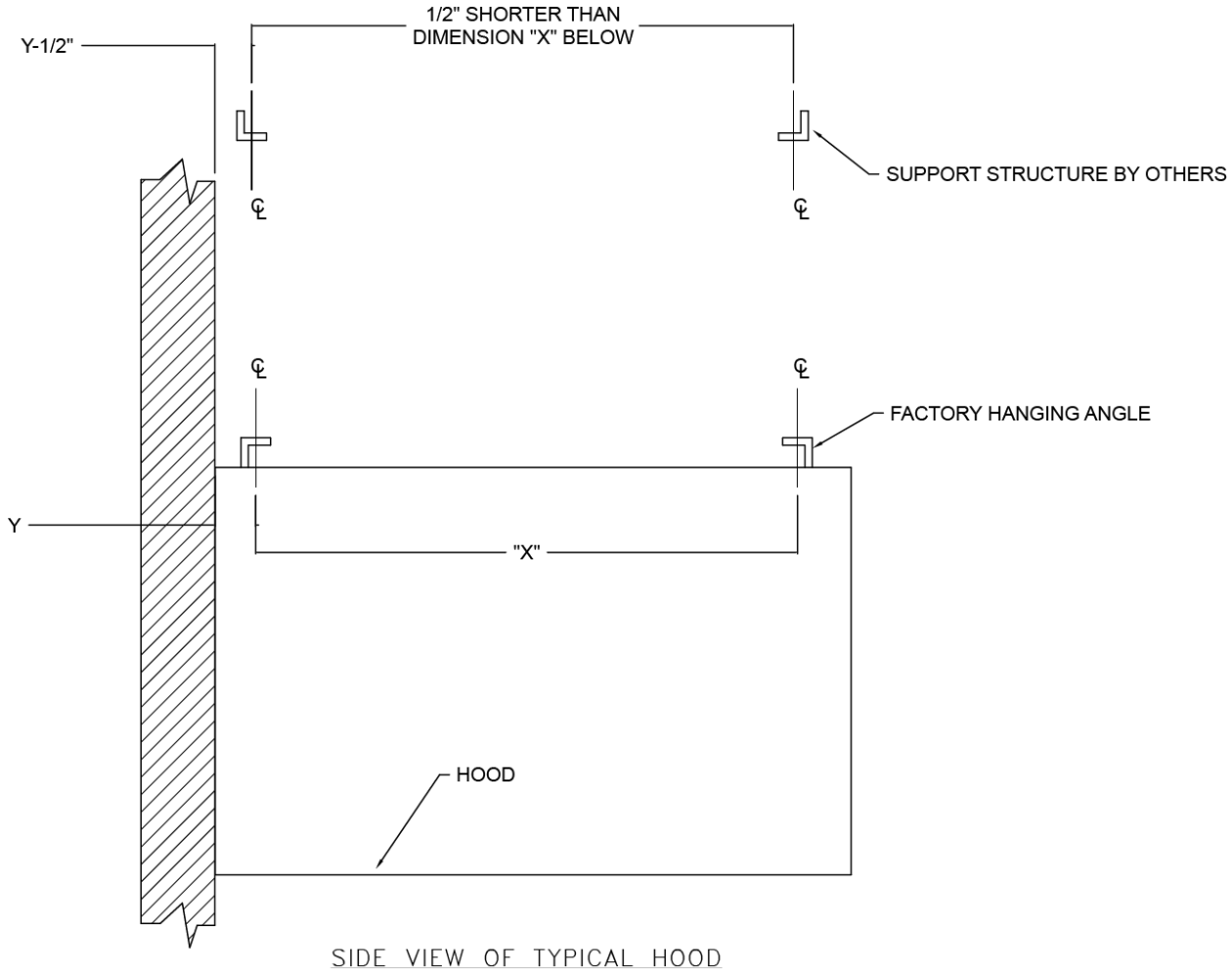

End-to-End Hoods

The following is a step-by-step procedure for installation of end-to-end ventilation hoods. Refer to **Figure 4** through **Figure 7.**

1. Follow steps 1 through 10 of the Installation of a Single Hood (Wall or Island) on **page 7** for each hood.
2. Adjust tension on hanging rods to position hoods so they fit flush with each other as shown in **Figure 4** and **Figure 5**.
3. Bolt the top of the hoods together. Refer to **Figure 6** and **Figure 7**.
4. Once all of the hoods are hung, follow steps 11 through 19 of the Installation of a Single Hood (Wall or Island).
5. **NOTE: Hoods having more than a 1/8" gap between them must be repositioned so that gap between hoods is <= 1/8". Run a bead >=1/8" of silicone sealant along the lower horizontal seam of the two hoods. Slip the U-channel trim, if applicable, over the seam as shown in Figure 4 and 5. Tape can be used to hold the U-channel in place until the silicone cures. U-channel is not required on hoods with Flanged ends.**
6. Run a bead of the same silicone sealant along the front vertical seam between the two hoods. Slip the T-strip trim between the hoods if applicable. Refer to **Figure 4** and **Figure 5**. **T Strip is not required on hoods with flanged ends and fully welded, ground, and polished corners.**
7. Proceed with steps 20 through 24 of the Installation of a Single Hood (Wall or Island).

Hanging Detail for Multiple Hood Models Hung End-to-End

Figure 4 – Hemmed Ends

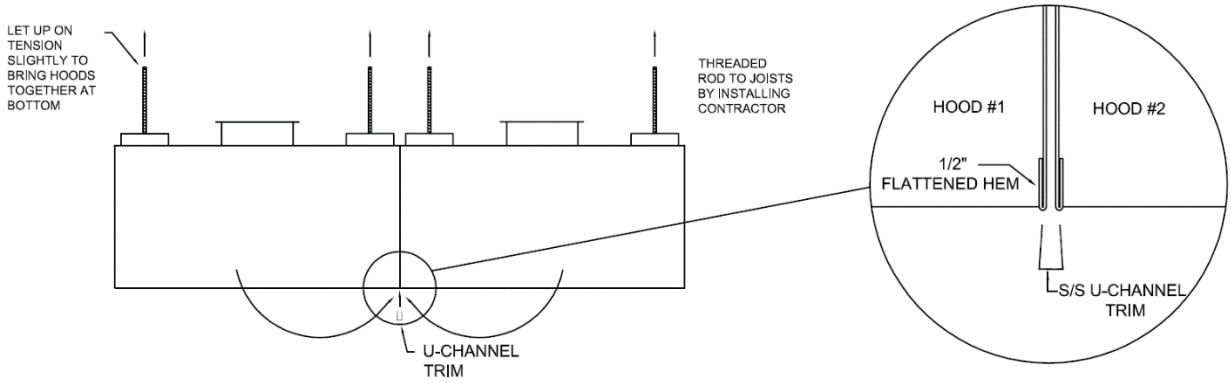

Figure 5 - Flanged Ends

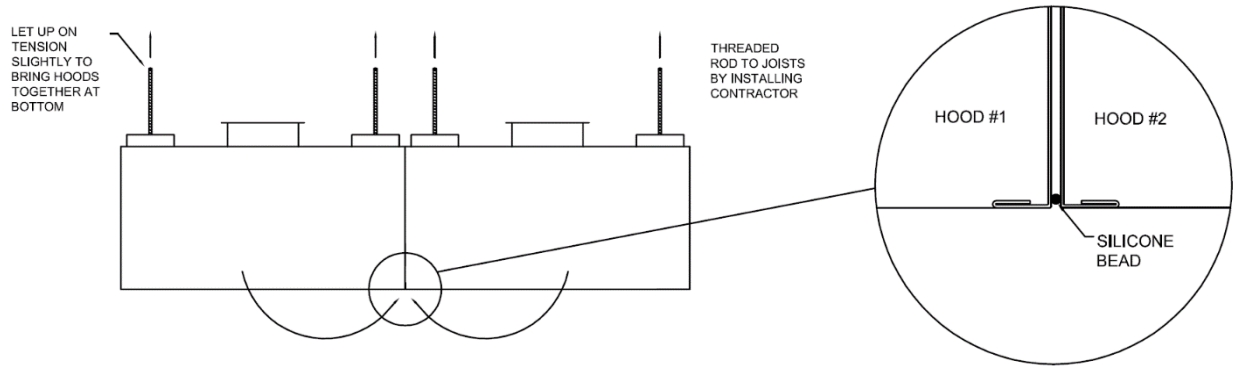

Hood Connection Detail for Multiple Hood Models

Figure 6 – Hemmed Ends with Trim Strip

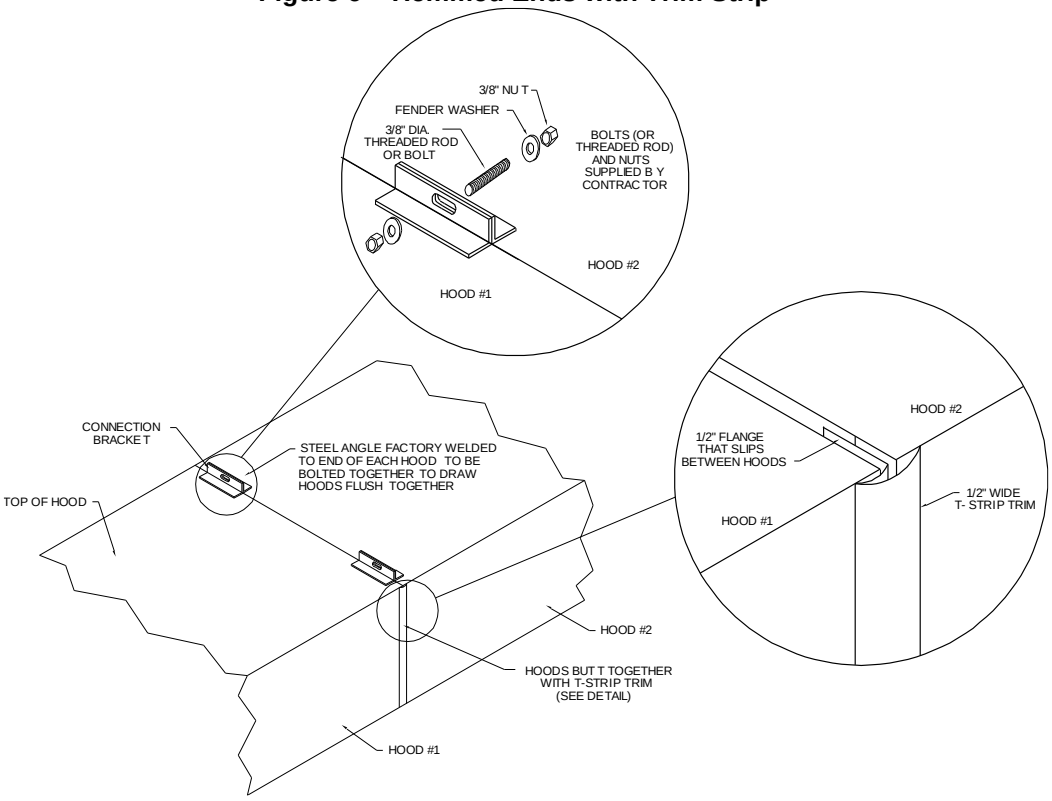

Figure 7 - Flanged Ends w/out Trim Strip

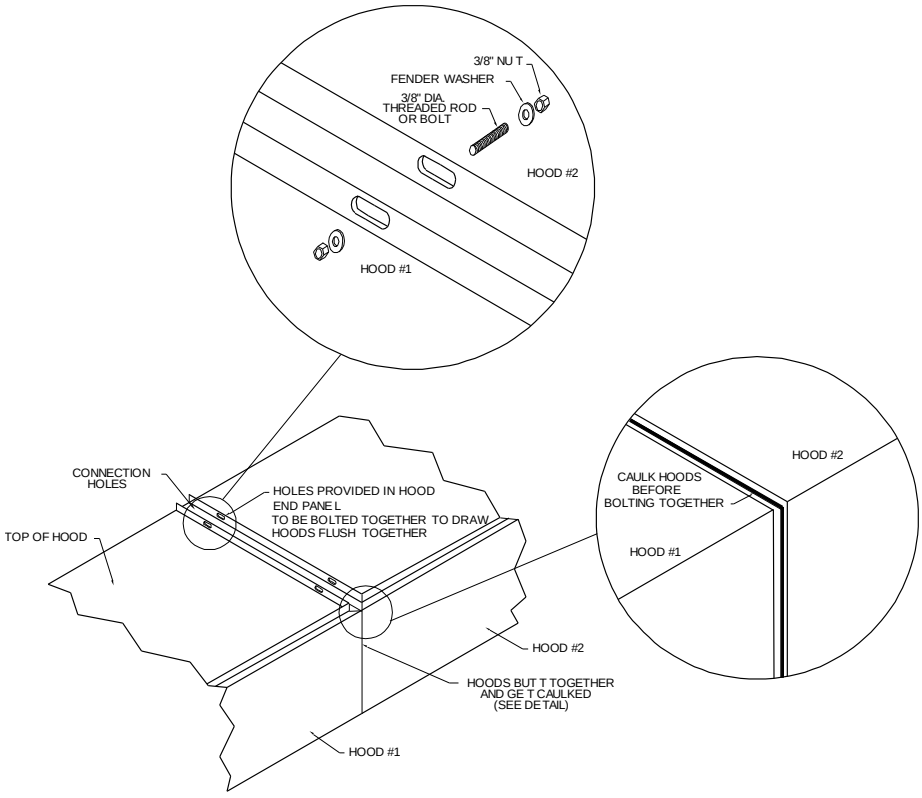

Back-to-Back Hoods

The following is a step-by-step procedure for installation of back-to-back ventilation hoods. Refer to **Figure 6** through **Figure 8.**

1. Follow steps 1 through 10 of the Installation of a Single Hood (Wall or Island) **page 7** for each hood.
2. Adjust tension on hanging rods to position hoods so they fit flush with each other as shown in **Figure 8**.
3. Bolt the top of the hoods together by sliding a threaded rod through the connection bracket slots and fastening it into position by using heavy duty nuts and washers. Refer to **Figure 6** and **Figure 7**.
4. Once all of the hoods are hung, follow steps 11 through 19 of the Installation of a Single Hood (Wall or Island).
5. Run a bead >=1/8" of silicone sealant on the lower horizontal seam between the two hoods. Slip the U-channel over the seam as shown in **Figure 8**. Tape can be used to hold the U-channel in place until the silicone cures.
6. Run a bead of the same silicone sealant along the side vertical seam between the two hoods. Slip the T-strip trim between the hoods. Refer to **Figure 6** and **Figure 7**. **T Strip is not required on hoods with flanged ends and fully welded, ground, and polished corners.**
7. Proceed with steps 20 through 23 of the Installation of a Single Hood (Wall or Island).

Figure 8 - Hanging Detail for Hoods Hung Back-to-Back

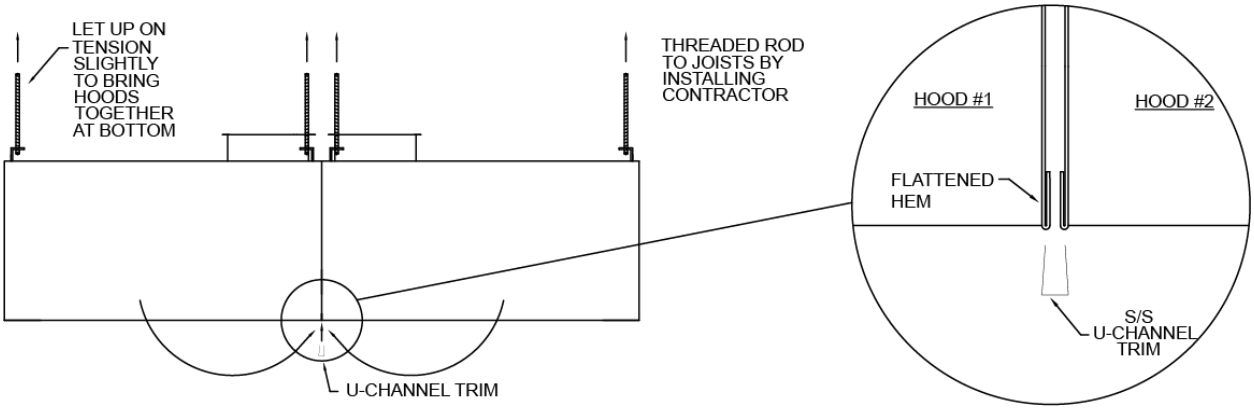

Guidelines for Ductwork Installation

Ductwork is furnished by supplier only if specified by the customer. The following information is provided as a guideline only. Ductwork should be installed in accordance with the local codes and restrictions. It is the responsibility of the installer to check local codes prior to installing the ductwork.

1. All ductwork must be installed in the most direct manner possible.
2. Exhaust duct must be made of 16 gauge carbon steel, 18 gauge stainless steel or must be listed for use with commercial kitchen hoods and follow the manufacturer's listing.
3. Per NFPA 96, all exhaust duct seams and joints must have a continuous liquid tight external weld; exception would be Listed Factory Built Grease Duct.
4. Exhaust risers on the hood have been sized to achieve a velocity of 500-2200 FPM, per NFPA 96, based upon the CFM required for the hood. Maintain the area of each riser when connecting duct offsets or transitions.
5. Branches should enter at gradual expansions and at a preferred angle of 30 degrees or 45 degrees if necessary.
6. When a "pantleg duct" is required to bring two ducts into one exhaust fan, observe the following in order to obtain desired performance:
    a. Use ONLY radius back and radius throat elbows. 2 to 2.5 diameter center line radius is recommended.
    b. Maintain the distance between the center lines of exhaust ducts at a maximum of 12' apart.
    c. The main duct going to the exhaust fan must be the sum of the area of the separate legs.
7. Supply air risers are sized around a maximum of 400 FPM. Maintain this area when installing ducts.
8. Using "flexible" type duct for the supply duct is not recommended, but allowable if less than 6' transitions per SMACNA guidelines.
9. Install rigid type duct in accordance with SMACNA Low Pressure requirements will be acceptable.
10. Access Doors should be provided at the sides or at the top of the duct, as well as changes of direction. Please refer to your AHJ if questions on requirements for horizontal and vertical duct run.
11. **IMPORTANT:** When a fusible link is installed in the make-up air damper at the hood collar, an access door must be cut into the supply duct by the installer.
12. Duct sensor may ship loose on hoods with field cut risers. When double wall duct or ductwork with a diameter smaller than 10" is used, loose duct sensors should be installed in the top of the plenum near the riser in the path of the exhaust airflow.

Installation of Hood Accessories

Back Return Installation

NOTE: Report any damage to the delivering freight carrier and file a claim if appropriate.

1. Locate the assembly and unpack the product from the crate, being very careful not to dent or scratch the outer surface.
2. If the supply risers are to be field cut, cut the risers in as desired. **NOTE: For factory cut supply risers, the manufacturer installs a 2" vertical flange around the opening.** This flange is intended to slip inside a supply boot that is provided by the installer.
3. Locate the wall and ceiling joists which will support the assembly.
4. Use 1/2" threaded rod to hang the back return. Install the threaded rod and angle or Unistrut® that will be used to hang the assembly from the ceiling joists. Drill 9/16" holes as needed in the angle for the threaded rod. Be sure to line up with the welded-on angle mounting brackets on the back return.
5. The back return is typically hung so its top edge is the same height as the top edge of the hood. See **Figure 9**. Refer to Step 2 in the Installation of a Single Hood (Wall or Island) instructions on **page 7** to determine the hood and back return hanging heights.
6. Slowly raise the back return until hanging rods can be attached to the hanging angles. It is advisable to do this before the back return reaches its final height. **NOTE: Please use caution as weight is not proportionally dispersed.** Install the threaded rod into the back return hanging angles and use heavy duty nuts to secure the connection.
7. Make sure the back return is level. Secure to wall in a manner acceptable to the AHJ.
8. If there are multiple back return sections, install the remaining sections now. Use caulk and the T-strip trim between adjacent back return sections. Refer to **Figure 10**.
9. Peel the protective plastic coating on the back return down below where the bottom edge of the hood will rest against it, so it does not remain behind the hood.
10. Caulk the seams between the wall and the back return assembly after the hood and all other accessories have been installed.

Section View of Typical Hood with Back Return

Figure 9 – Typical Hood with Back Return

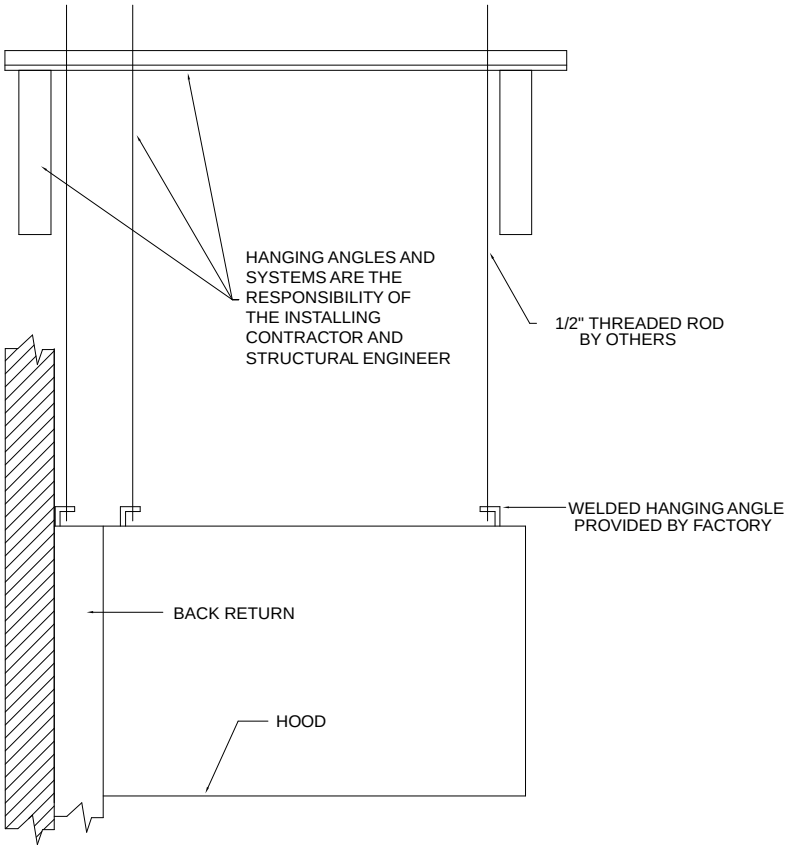

Figure 10 - Back Return – Multiple Sections

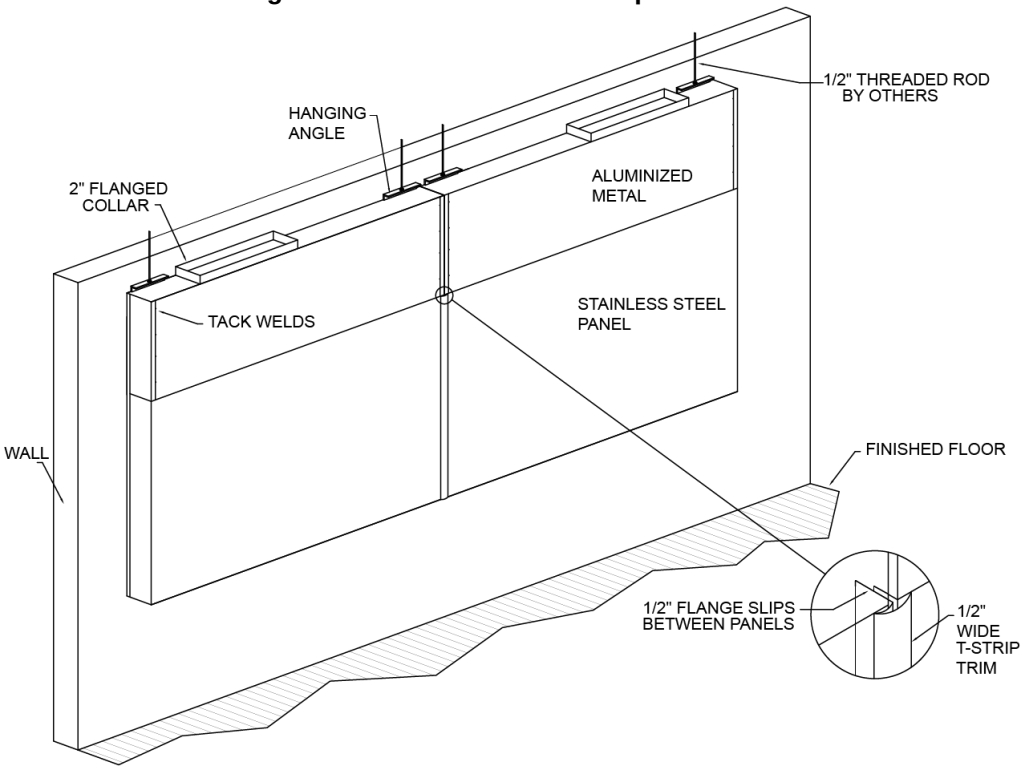

Bolt-Together Standoff Installation

NOTE: Report any damage to the delivering freight carrier and file a claim if appropriate.

1. Unpack the standoff panels from the shipping container, being very careful not to dent or scratch the panels.
2. Mount the end caps for the back standoff to the hood securely with self-tapping sheet metal screws. Clamp the back standoff and the hood together before screwing so they do not shift. Refer to **Figure 11**.
3. Place the back standoff filler piece into place flush with the rear bottom edge of the hood and secure with self-tapping sheet metal screws.
4. Continue with hood installation instructions.
5. After the hood installation is complete, secure the bolt-together standoff to the wall or other hoods as applicable in a manner acceptable to the authority having jurisdiction.

Figure 11 - Bolt Together Standoff Installation

Mount the end caps for the back standoff to the hood using self-tapping sheet metal screws provided. Screw through the end cap flanges into the flanges on the hood.

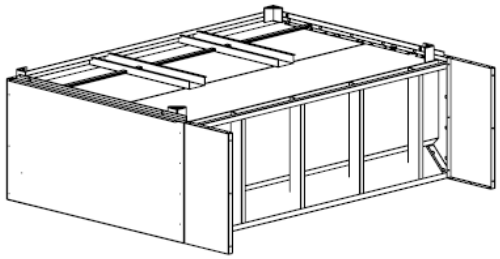

Place the back standoff horizontal filler piece into place. Mount the filler piece using self-tapping sheet metal screws provided. Screw through the filler piece flanges into the studs on the back side of the hood. Do not penetrate into the capture area. Once complete, no screws should be visible from the outside of the hood.

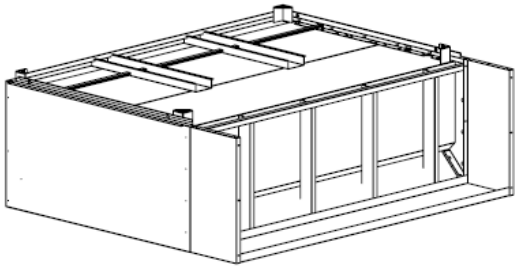

Attach the back standoffs to the wall using screws appropriate for the wall. Screw through the flanges of the standoff into the wall. If standoff mounts against another hood, use the procedure from steps 1 and 2 for the second hood.

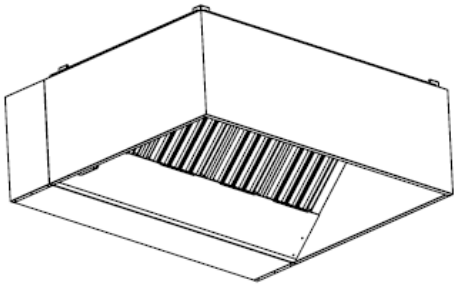

Single PSP/AC-PSP Installation

NOTE: Report any damage to the delivering freight carrier and file a claim if appropriate.

1. Locate the assembly and unpack it from the crate, being very careful not to dent or scratch the outer surface. If the supply risers are to be field cut, cut the risers in as desired.
2. Locate the ceiling joists which will support the assembly. If using Unistrut®, then securely attach to the ceiling joist.
3. Use 1/2" threaded rod to hang the PSP/AC-PSP. Install the threaded rod and angle that will be used to hang the assembly from the ceiling joists. Drill 9/16" holes as needed in the angle for the threaded rod. Be sure to line up with the welded-on angle mounting brackets on the PSP/AC-PSP.
4. Peel the protective plastic coating on the hood down below where the bottom edge of the PSP/AC-PSP will rest against the hood.
5. Move the PSP/AC-PSP into position as indicated by the project submittal drawings; lining up the top edge of the PSP/AC-PSP with the top edge of the hood. Remove the protective plastic coating from the back of the PSP/AC-PSP. Refer to **Figure 12**.
6. Install the threaded rod into the PSP/AC-PSP hanging angles and use heavy-duty nuts to secure the connection. Adjust tension on hanging rods to position PSP/AC-PSP so it fits flush with the hood. **NOTE: Do not apply too much tension; otherwise, a gap between the PSP/AC-PSP and Hood will be created at the bottom.**
7. Where applicable, use sheet metal screws provided from the factory to secure the PSP/AC-PSP attaching bracket to hood. Use at least 5 sheet metal screws for full size attachment brackets. Use at least 3 sheet metal screws for 1/2 sized attachment brackets. **NOTE: Depending on PSP/AC-PSP length and damper placement, there may be 3 or 4 attachment brackets. Hoods and PSPs/AC-PSPs that are 12 feet or greater in length require additional hanging brackets located near the center of the PSP/AC-PSP.**
8. Caulk the seams between the hood(s) and the PSP/AC-PSP assembly, as well as between adjacent PSP/AC-PSP assemblies (if applicable) after the hood(s) and hood accessories have been installed.

Figure 12 – Single PSP/AC-PSP Installation

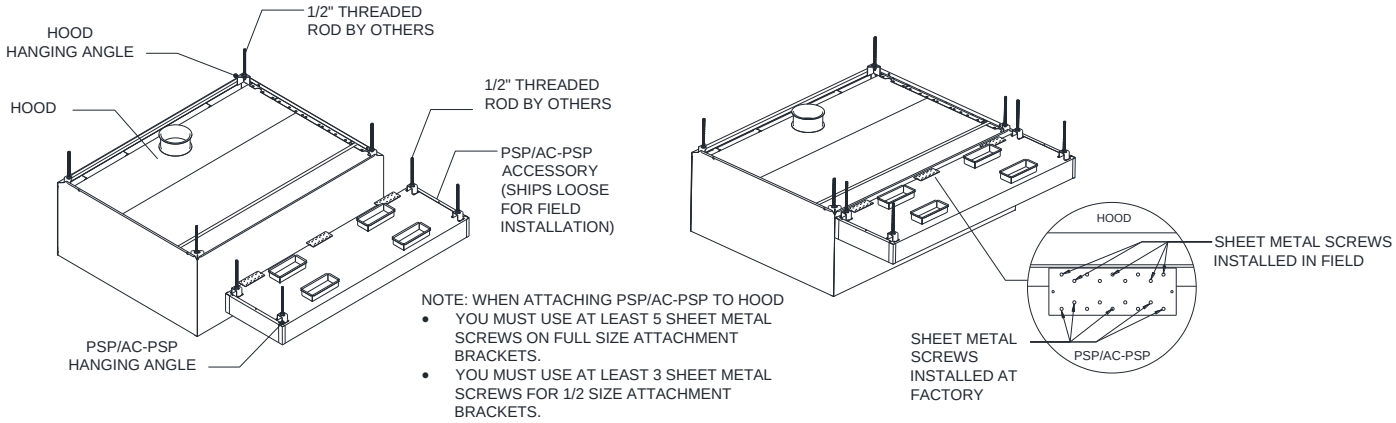

CAUTION: ALL HOOD AND PSP/AC-PSP HANGING ANGLE BRACKETS MUST BE USED DURING INSTALLATION. VERIFY ALL CONNECTIONS ARE SECURED TO CEILING JOISTS OR UNISTRUT. IMPROPER INSTALLATION MAY LEAD TO INJURY AND/OR DEATH.

Multiple PSP/AC-PSP Installation

NOTE: Report any damage to the delivering freight carrier and file a claim if appropriate.

1. Locate the assembly and unpack it from the crate. Be very careful not to dent or scratch the outer surface.
2. Upon completion of the hood install, install the back PSP/AC-PSP first. Then if applicable, install the side PSP/AC-PSP.
3. If the supply risers are to be field cut, cut the risers in as desired.
4. Locate the ceiling joists which will support the assembly. If using Unistrut®, securely attach to the ceiling joist.
5. Use 1/2" threaded rod to hang the PSP/AC-PSP. Install the threaded rod and angle that will be used to hang the assembly from the ceiling joists. Drill 9/16" holes in the angle if not using Unistrut®. Make sure to line up with the angle mounting brackets on the PSP/AC-PSP.
6. Peel the protective plastic coating on the hood down below where the bottom edge of the PSP/AC-PSP will rest against the hood.
7. Move the PSP/AC-PSP into position as indicated by the project submittal drawings. If flush mounted, lineup the top edge of the PSP/AC-PSP with the top edge of the hood. Remove the protective coating from the back of the PSP/AC-PSP. Refer to **Figure 13** for PSP/AC-PSP installation reference.
8. Install the threaded rod into the PSP/AC-PSP hanging angles and use heavy duty nuts to secure the connection. Adjust tension on hanging rods to position PSP/AC-PSP so it fits flush with the hood. **NOTE: Do not apply too much tension, otherwise, a gap between the PSP/AC-PSP and Hood will be created at the bottom.**
9. Install additional PSPs/AC-PSPs, if applicable, in the same manner.
10. Where applicable, use sheet metal screws provided from the factory to secure the PSP/AC-PSP attaching bracket to other assemblies/hood, see to **page 21**. Use at least 5 sheet metal screws for full size attachment brackets. Use at least 3 sheet metal screws for 1/2 sized attachment brackets. Refer to **Figure 15**. **NOTE: Depending on PSP/AC-PSP length and damper placement, there may be 3 or 4 attachment brackets. Hoods and PSPs/AC-PSPs that are 12 feet or greater in length require additional hanging brackets located near the center of the PSP/AC-PSP.**
11. Caulk the seams between the hood(s) and each PSP/AC-PSP, as well as between adjacent PSPs/AC-PSPs (if applicable) after the hood(s) and hood accessories have been installed. An isometric view of the hood assembly is shown in **Figure 15**.

Figure 13 – Multiple PSP/AC-PSP Installation

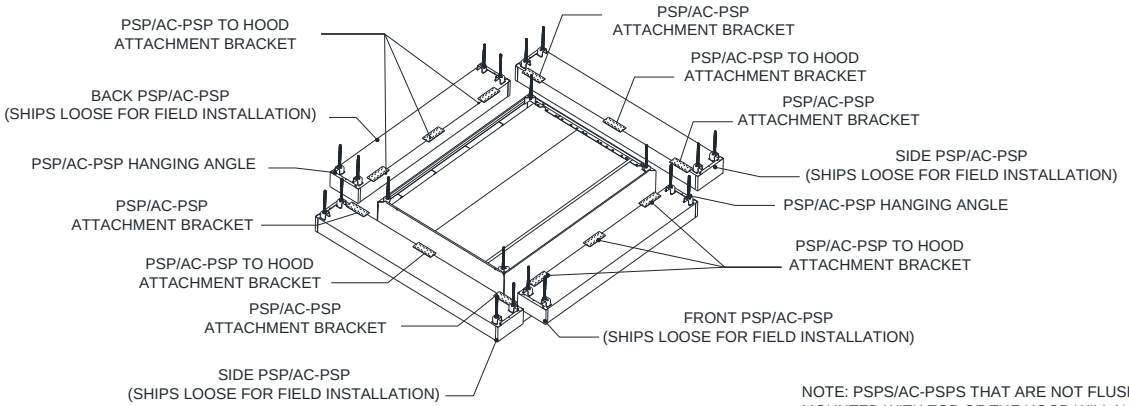

CAUTION: ALL HOOD AND PSP/AC-PSP HANGING ANGLE BRACKETS MUST BE USED DURING INSTALLATION. VERIFY ALL CONNECTIONS ARE SECURED TO CEILING JOISTS OR UNISTRUT. IMPROPER INSTALLATION MAY LEAD TO INJURY AND/OR DEATH.

Figure 14 - Attachment of Side PSP/AC-PSP Bracket

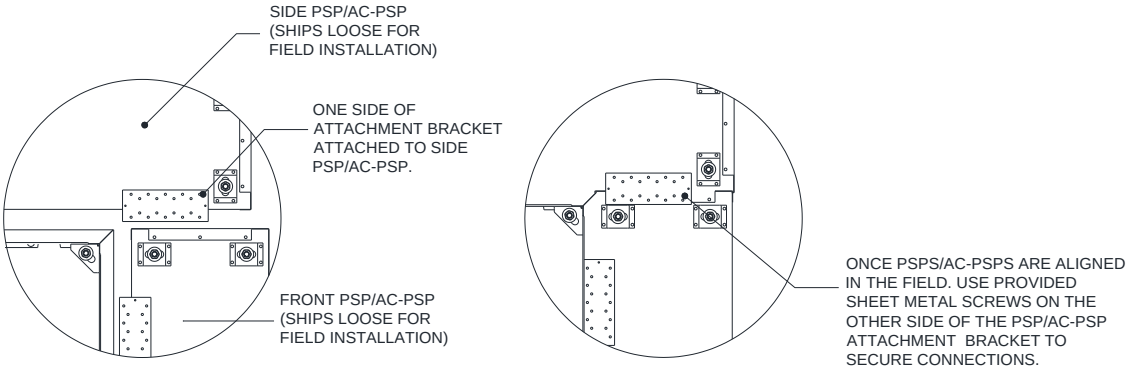

Figure 15 – Attachment of PSP/AC-PSP to Hood

NOTE: PSPS/AC-PSPS THAT ARE NOT FLUSH MOUNTED WITH HOOD WILL NOT USE PSP/AC-PSP TO HOOD ATTACHMENT BRACKET.

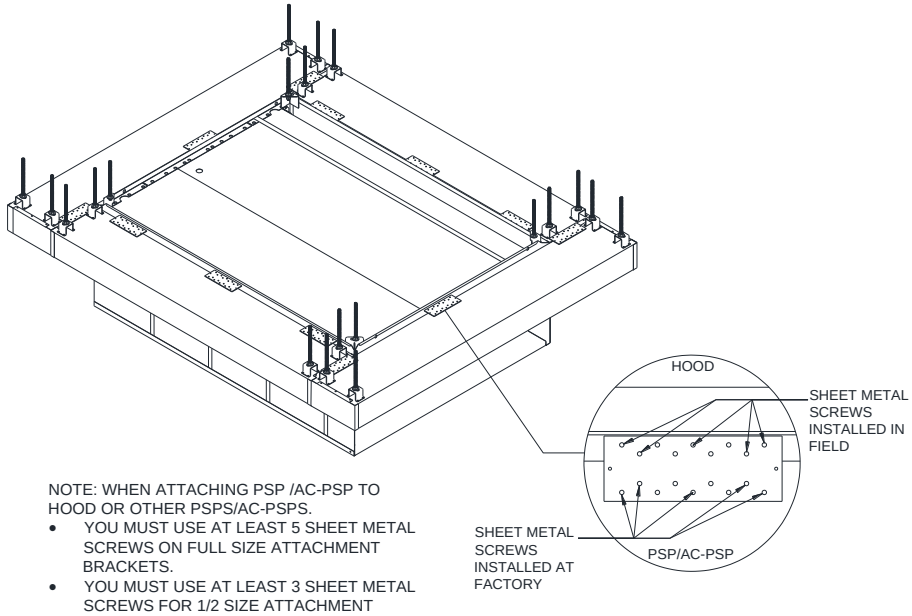

NOTE: WHEN ATTACHING PSP /AC-PSP TO HOOD OR OTHER PSPS/AC-PSPS.

- YOU MUST USE AT LEAST 5 SHEET METAL SCREWS ON FULL SIZE ATTACHMENT BRACKETS.
- YOU MUST USE AT LEAST 3 SHEET METAL SCREWS FOR 1/2 SIZE ATTACHMENT BRACKETS.

CAUTION: ALL HOOD AND PSP/AC-PSP HANGING ANGLE BRACKETS MUST BE USED DURING INSTALLATION. VERIFY ALL CONNECTIONS ARE SECURED TO CEILING JOISTS OR UNISTRUT. IMPROPER INSTALLATION MAY LEAD TO INJURY AND/OR DEATH.

Wrapper (Enclosure Panel) Installation

NOTE: Report any damage to the delivering freight carrier and file a claim if appropriate.

1. Unpack the wrapper panels from the shipping container, being very careful not to dent or scratch the panels.
2. Locate one of the side wrapper panels and position it on the hood so that the 1/2” flange on the bottom of the panel slips underneath the side channel on top of the hood. Refer to **Figure 16**.

   NOTE: A notch will have to be cut on the wrapper flange using shears (tin snips) where interference occurs, where applicable. Refer to **Figure 17**.
3. Press fit panel into place until wrapper face is flush with hood face. Screw or pop-rivet wrapper to the side channel and wall. Refer to **Figure 18**.
4. Locate front wrapper panel. Position its lower 1/2” flange under front channel on hood and slide panel into position, so that the end of front panel is behind the 90 degree bend of the side panel. Refer to **Figure 19**. Once in place, press fit the lower flange of the front panel into the front channel in order to have wrapper face flush with the front of the hood. Screw or pop-rivet bottom of front panel to the front channel.
5. Drill appropriate holes and rivet front to side wrapper panel. Refer to **Figure 19**.
6. If multiple panels are used, a stainless trim piece will be provided to attach multiple panels together (i.e. hood is side to side, hood is back to back to another, or the wrapper length exceeds 16 feet). Attach the panels by slipping them behind the stainless trim and fastening with screws or rivets, see **Figure 21.**

   NOTE: Trim will have to be cut to fit. In most instances, trim should extend from bottom of hood to top of wrapper panel.
7. Locate the other side panel. Repeat steps 2 and 3. Attach to front wrapper panel as instructed in step 4.

   NOTE: In most instances where hood is located against a side wall, fasten the front wrapper panel to the wall. Refer to Figure 20.
8. Caulk all gaps and seams after the hood(s) and hood accessories have been installed.

Figure 16 – Wrapper Detail

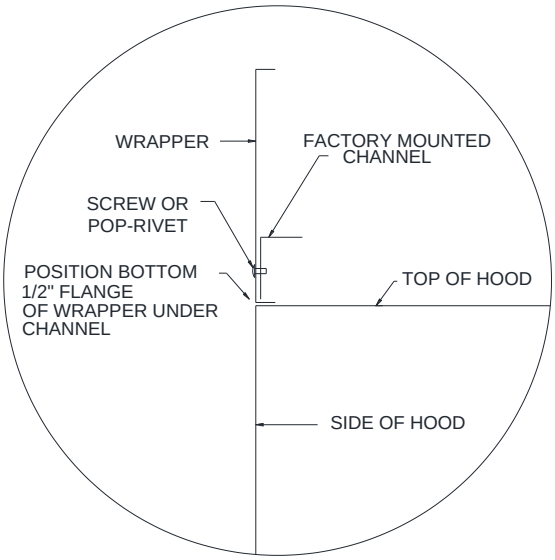

Figure 17 - Top Hood Seam Detail (Not on all models)

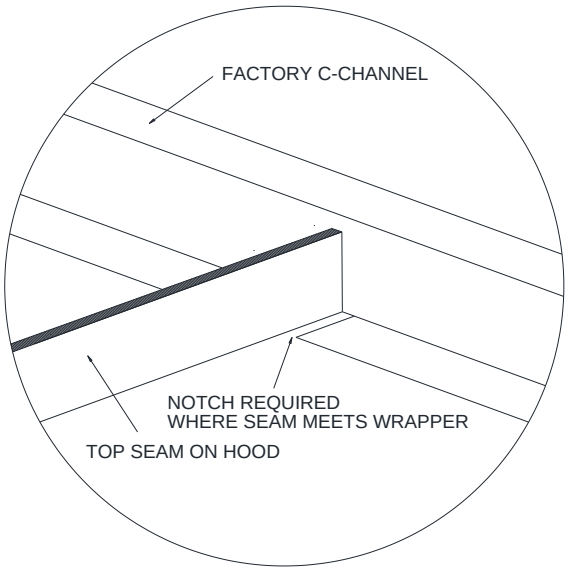

Figure 18 - Rear Wall Attachment

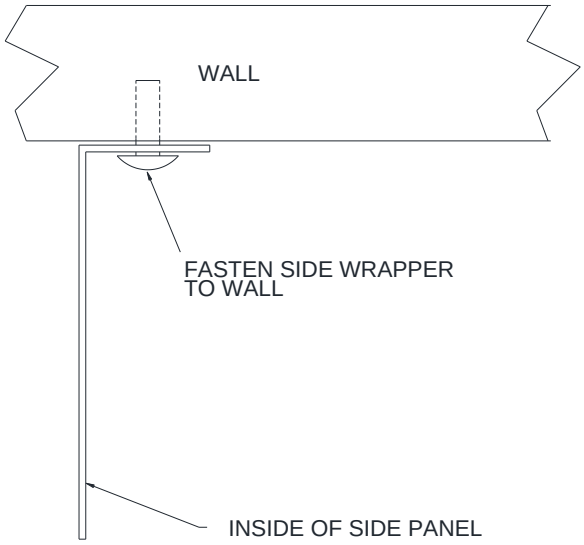

Figure 19 - Front Corner Assembly

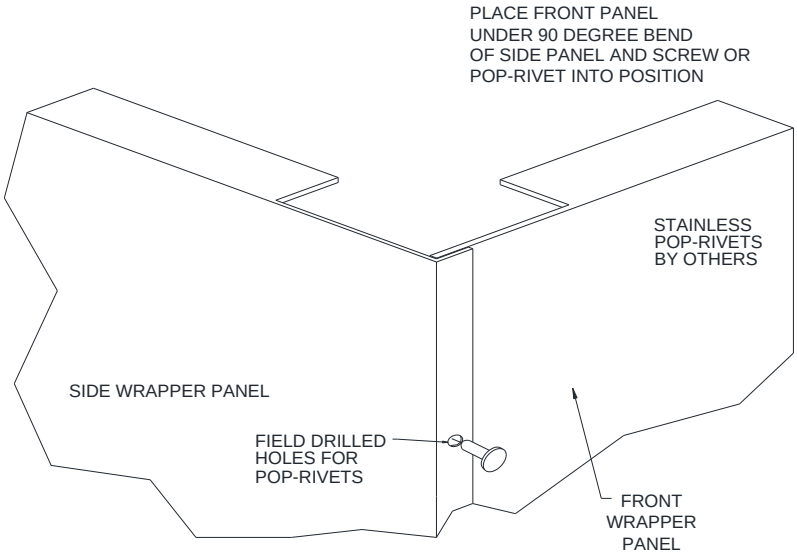

Figure 20 - Side Wall Attachment

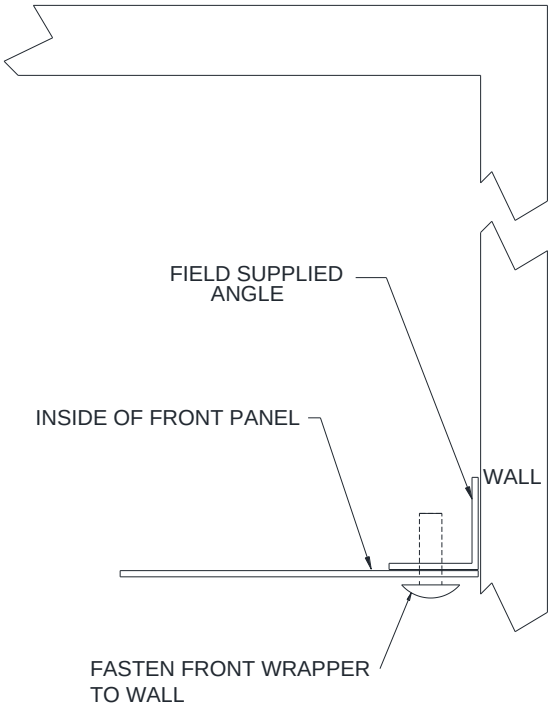

Figure 21 - Completed Wrapper Assembly

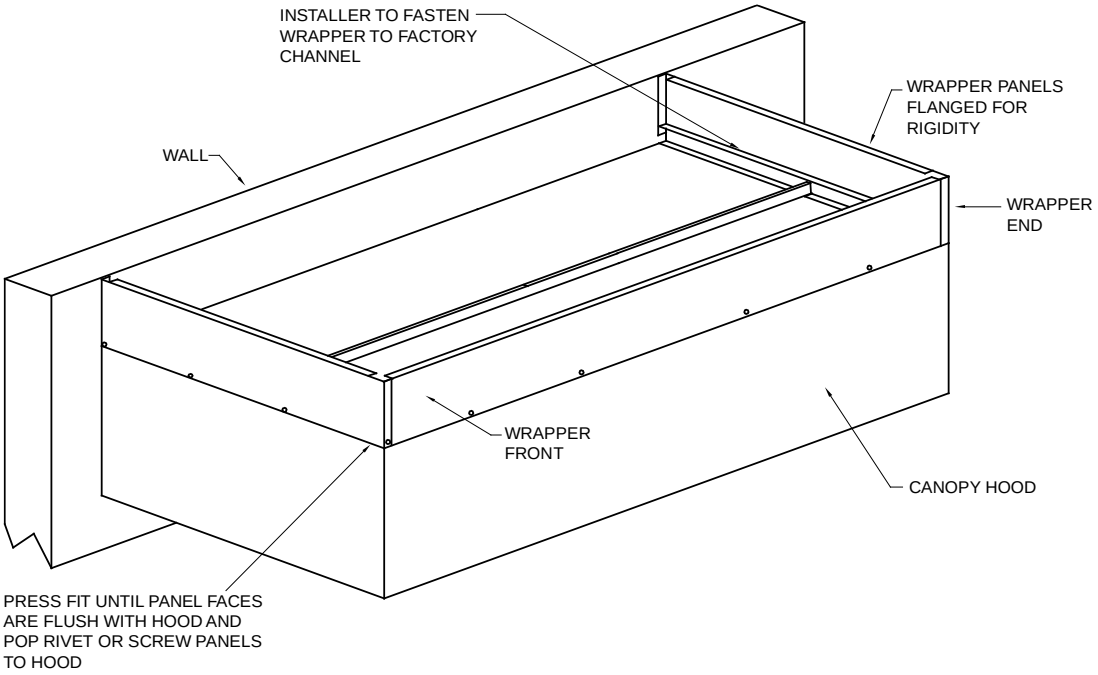

Figure 22 – Completed Wrapper Assembly on End-to-End Hoods

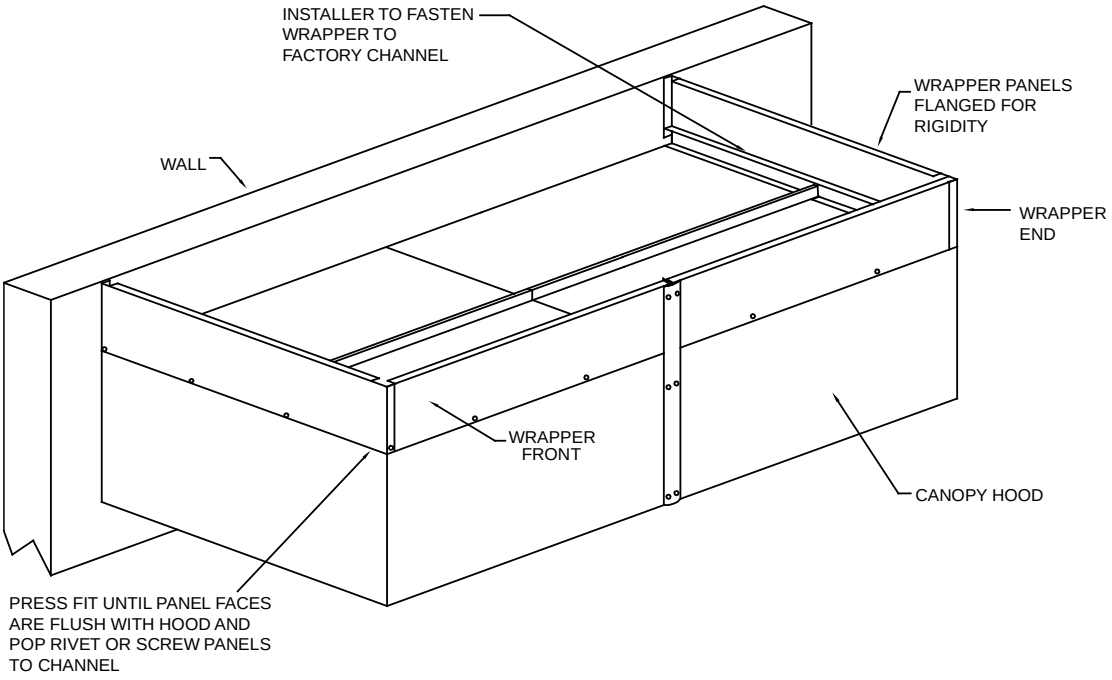

End Panel Installation

NOTE: Report any damage to the delivering freight carrier and file a claim if appropriate.

1. Unpack the end-panel(s) from the shipping container, being very careful not to dent or scratch the panels. Refer to the project submittal drawings to determine mounting location.
2. Position the end panel with the kinked top located flush against the inside of the hood end and the rear flange located flush against the rear wall and facing toward the interior of the hood. Refer to **Figure 23** and **Figure 24**.
3. Attach the top edge of the end-panel to the end of the hood using the acorn nuts provided. Hand tighten each acorn nut, then use a wrench to add an additional 1/4 turn – **do not over tighten**.
4. Secure the rear flange to the wall using stainless steel sheet metal screws, being sure to keep the end panel straight vertically.
5. Caulk all seams between the end-panel and the hood after the hood(s) and hood accessories have been installed.

Figure 23 - End Panel Installation (Hoods with Hems on Ends)

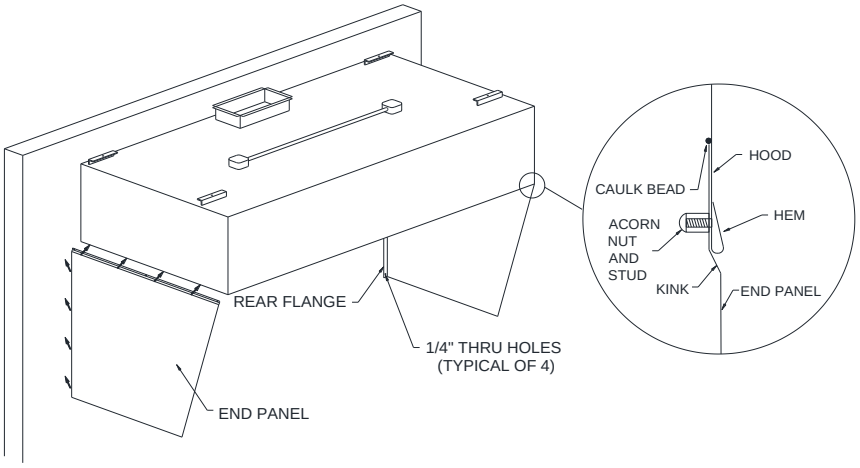

Figure 24 - End Panel Installation (Hoods with Flanges on Ends)

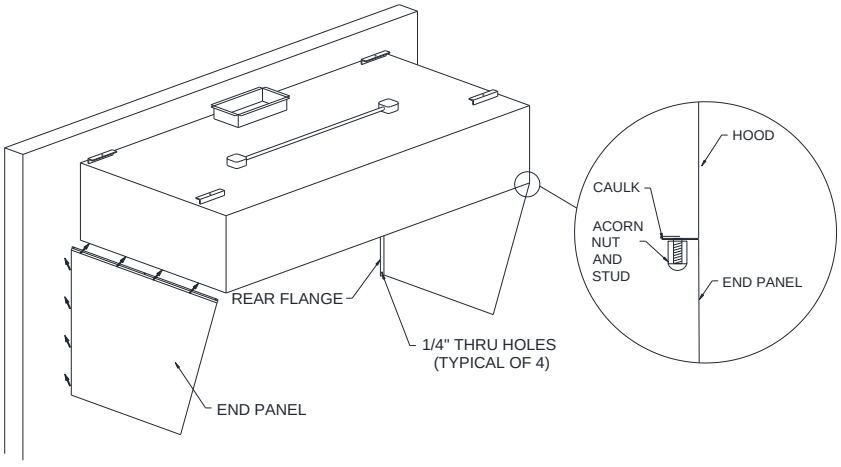

Hood End panels or walls may be field installed or shipped loose from the factory. End panels allow the clearance from the cooking appliance to the end of the hood to be reduced to 0 inches

Quarter End Panel Installation

1. Refer to **Figure 25** and **Figure 26.**
2. Follow steps 1 through 5 of the End Panel Installation instructions on **page 26**.

Figure 25 - Quarter End Panel Installation (Hoods with Hems on Ends)

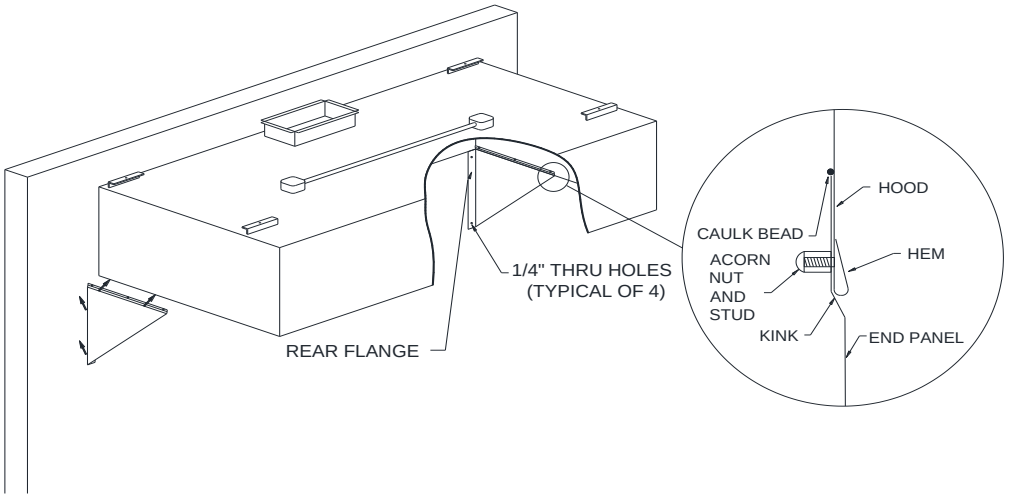

Figure 26 - Quarter End Panel Installation (Hoods with Flanges on Ends)

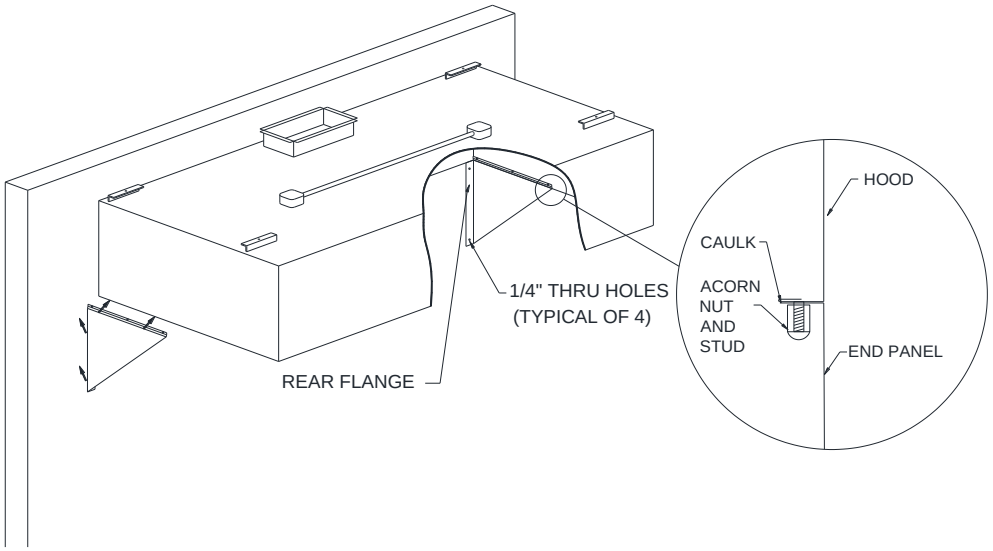

Hood End panels or walls may be field installed or shipped loose from the factory. End panels allow the clearance from the cooking appliance to the end of the hood to be reduced to 0 inches

Insulated End Panel Installation

1. Refer to **Figure 27** and **Figure 28.**
2. Follow steps 1 through 5 of the End Panel Installation instructions on **page 26**.

Figure 27 - Insulated End Panel Installation (Hoods with Hems on Ends)

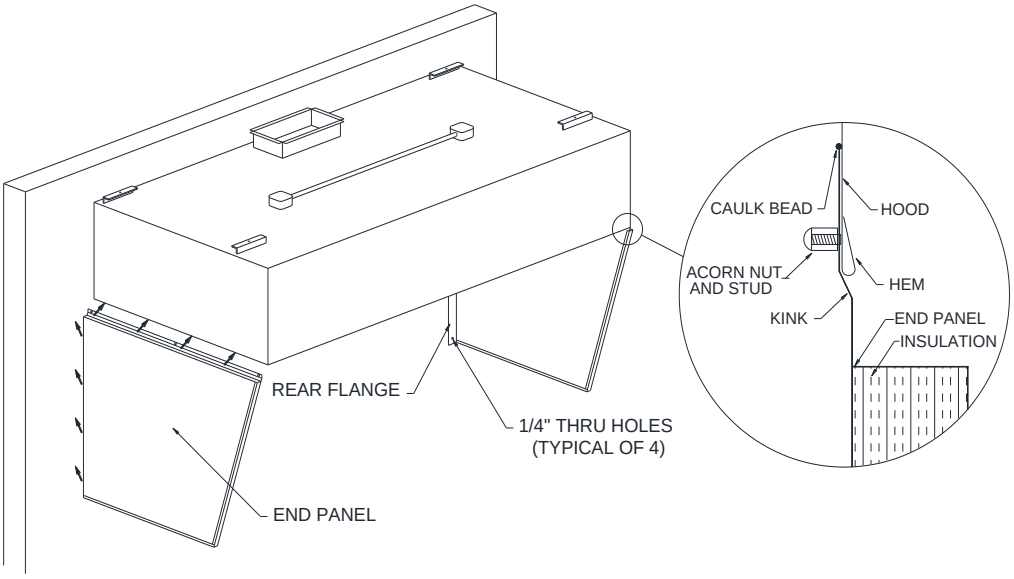

Figure 28 - Insulated End Panel Installation (Hoods with Flanges on Ends)

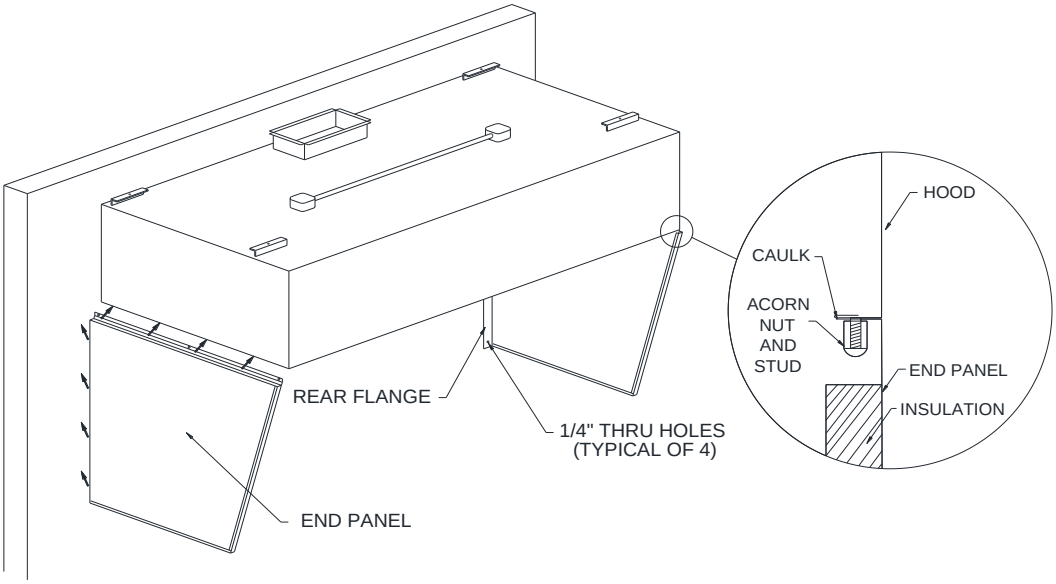

Hood End panels or walls may be field installed or shipped loose from the factory. End panels allow the clearance from the cooking appliance to the end of the hood to be reduced to 0 inches

Vertical End Panel Installation

1. Unpack the end panel(s) from the shipping container, being very careful not to dent or scratch the panels. Refer to the project submittal drawings to determine mounting location.
2. Position the end panel with the top located flush against the bottom of the hood end and the rear flange located flush against the rear wall and facing toward the interior of the hood. Studs on bottom of hood ends should align with slots on top of vertical end panel. Refer to **Figure 29**.
3. Adjust legs to create slight tension between the vertical end panel and bottom of hood. Confirm that the top side of the vertical end panel is flush with the bottom of the hood.

   NOTE: Legs have anchoring points in the feet which are optional to secure to the floor.
4. Secure the rear flange to the wall using stainless steel sheet metal screws, being sure to keep the end panel straight vertically.
5. Caulk all seams between the vertical end panel and the hood after the hood(s) and hood accessories have been installed.

Figure 29 – Vertical End Hoods with Flanges on Ends

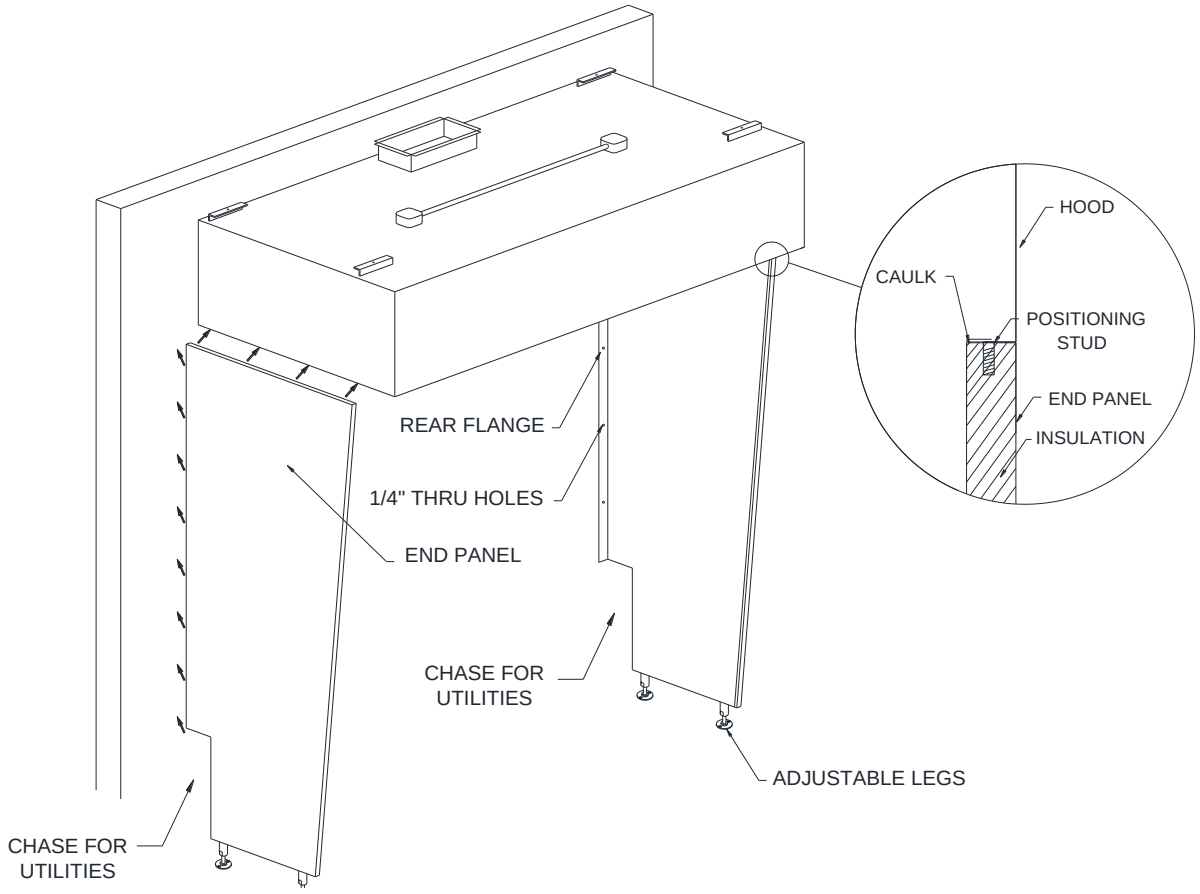

Hood End panels or walls may be field installed or shipped loose from the factory. End panels allow the clearance from the cooking appliance to the end of the hood to be reduced to 0 inches

Backsplash Installation

NOTE: Report any damage to the delivering freight carrier and file a claim if appropriate.

1. Unpack the backsplash panels from the shipping container being very careful not to dent or scratch the outer surface.
2. Refer to the project submittal drawings to determine mounting orientation (vertical or horizontal) and mounting location. If backsplash panels intended for the same wall are of different widths, position them in a symmetrical arrangement.
3. Determine whether or not cutouts are required to accommodate electrical outlets, pipes, etc. Make appropriate cutouts being careful not to crease the backsplash panels.
4. Make sure walls are clean and free of debris.
5. Apply Titebond® Advanced Polymer Panel Adhesive or equivalent recommended for stainless steel to backsplash panels and trim pieces. Do not allow the adhesive to dry. Use a trowel to spread adhesive in a smooth even manner to the edges and corners. **Do not allow clumping or bumps on the backside of the panel.**
6. Install the backsplash panels to the wall. When hanging multiple panels, install one at a time. Install trim pieces to the wall. Refer to **Figure 30**.
7. Once the panels are installed, immediately use a laminate roller to smooth the panel and adhesive out. **Do not press on the panel with hands or other foreign objects at all.**
8. Verify all backsplash panels are installed and have properly set before placing appliances or other objects in front of the panels.

NOTE: Follow adhesive manufacturer's recommendations on setting and dry time.

Figure 30 – Stainless Steel Backsplash

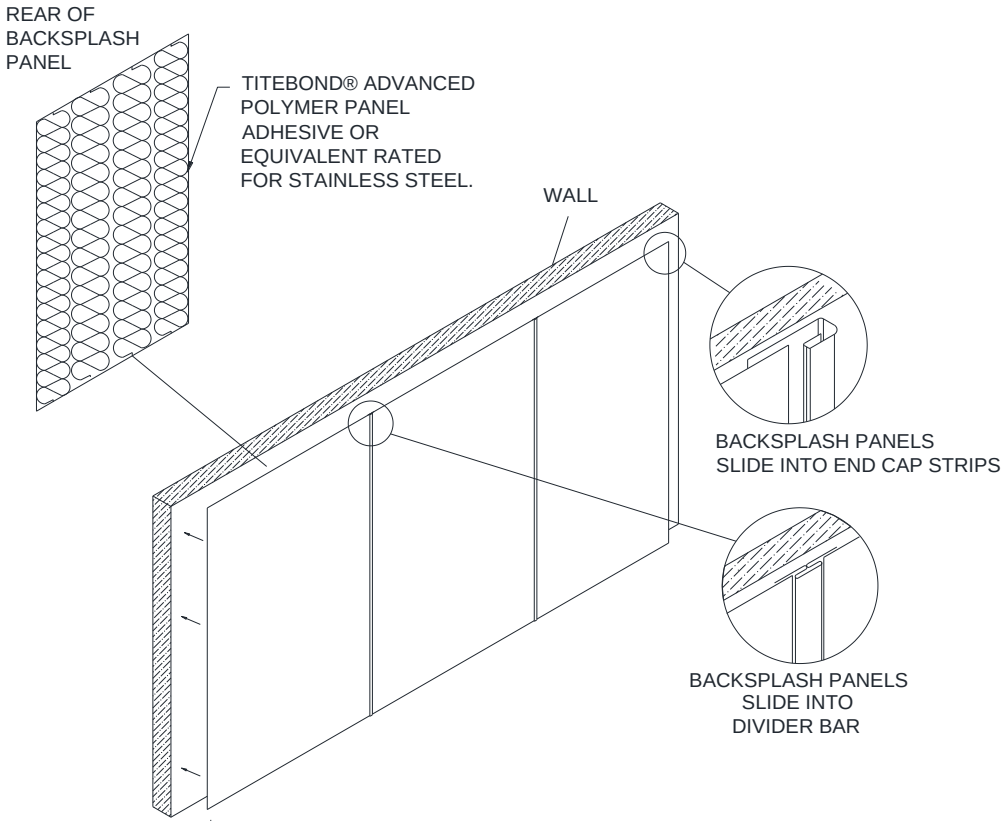

Insulated Backsplash Installation

1. Follow steps 1 through 3 of the Backsplash Installation instructions on **page 30**.
2. Slide the top flange behind the lower rear edge of the hood. Secure the bottom flange to the wall using stainless steel sheet metal screws. Refer to **Figure 29**.
3. If there are multiple insulated backsplash sections, install the others now.
4. Caulk the seams between the wall and the insulated backsplash panel after the hood(s) and hood accessories have been installed.

Figure 31 - Insulated Backsplash

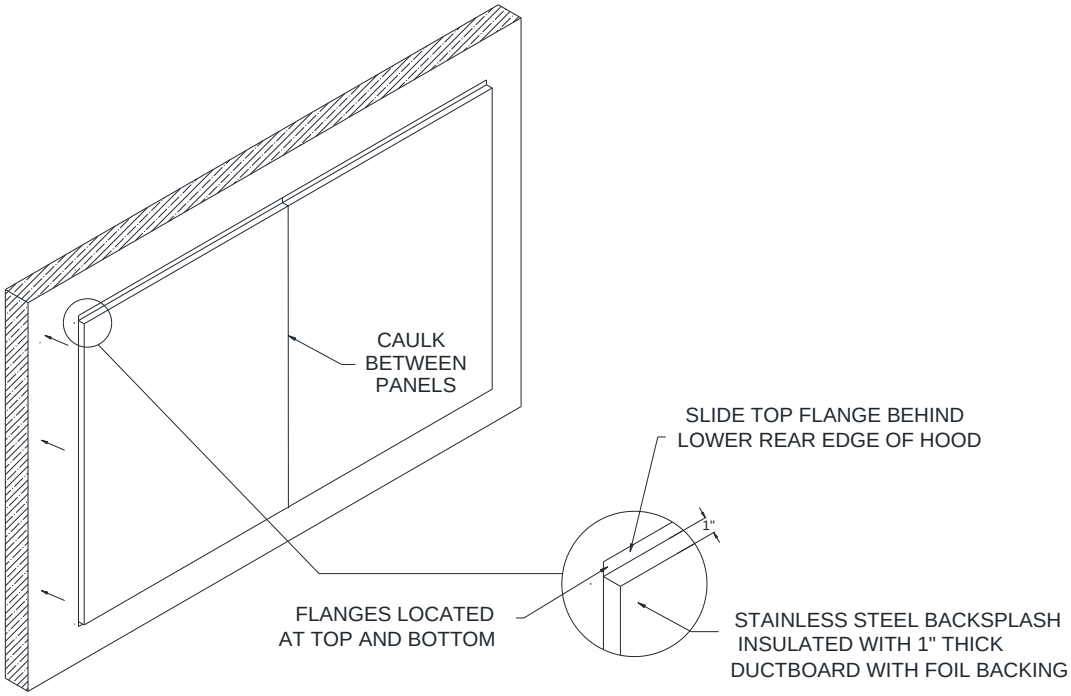

Pizza Oven Top Mount Flange Installation

1. Thoroughly inspect hood for damage including Pizza Oven Top Mount Flanges.
2. Carefully unpack hood, remove shipping screws from rear flange before moving hood.
3. Use supplied 3M 2000+ fire barrier sealant to apply a double bead to the underside of the flanges.
4. Centrally position the hood on top of the oven over the opening. The front edge of the side flanges should be flush with the front face of the oven.
5. Use supplied self-drilling screws to fasten hood to oven. Every mounting holes needs to be used.

Figure 32 – Pizza Oven Top Mount

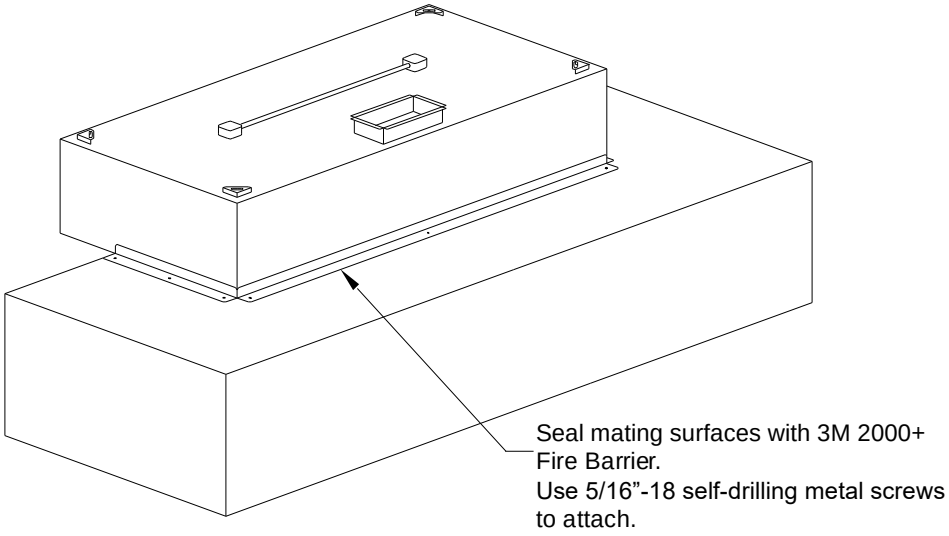

Plate Shelf Option Installation

Plate Shelf Hood comes with wrappers that have to be field installed. For field installation of wrappers, refer to **page 22**.

Figure 33 – Plate Shelf Option Installation

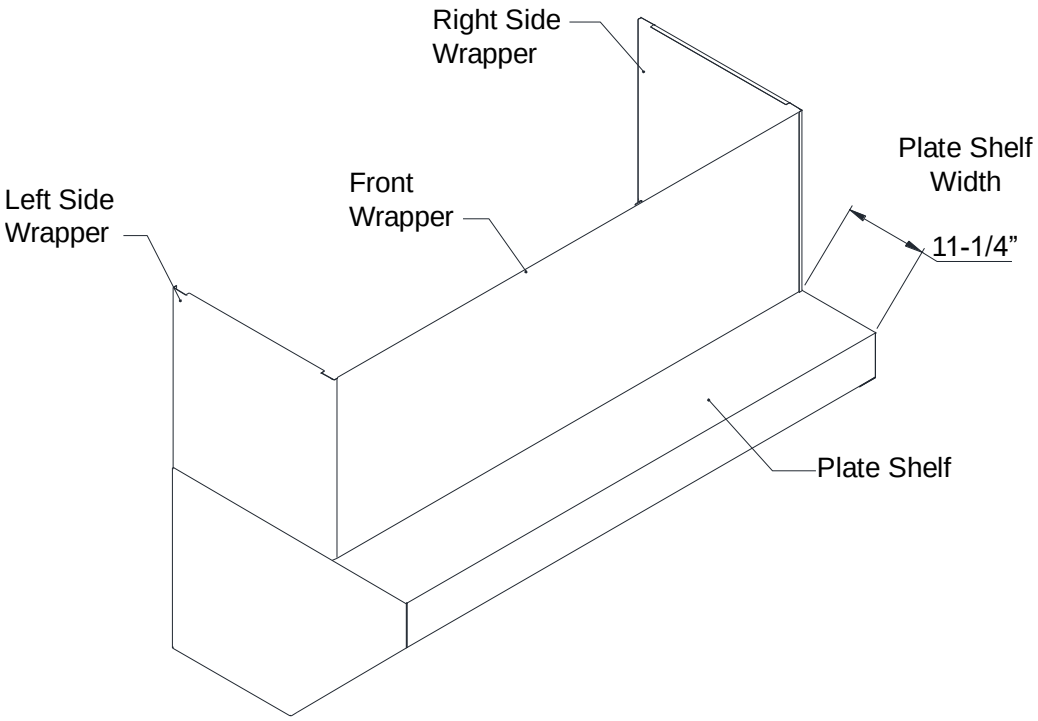

Continuous Capture

1. The hood is shipped with a U-trim to cap the raw edges of the continuous capture cutout(s). Remove U-trim from packaging.
2. Measure and cut U-trim to length for all four edges of the continuous capture cutout(s).
3. Dry fit cut pieces of U-trim to verify a proper finished fit.
4. Remove fitted U-trim pieces and apply silver silicone caulking to raw edges of the continuous capture cutout(s).
5. Reinstall fitted U-trim pieces to seal the raw edges of the continuous capture cutout(s).
6. Wipe off any excess caulking with a cotton cloth and rubbing alcohol.

Figure 34 – Continuous Capture

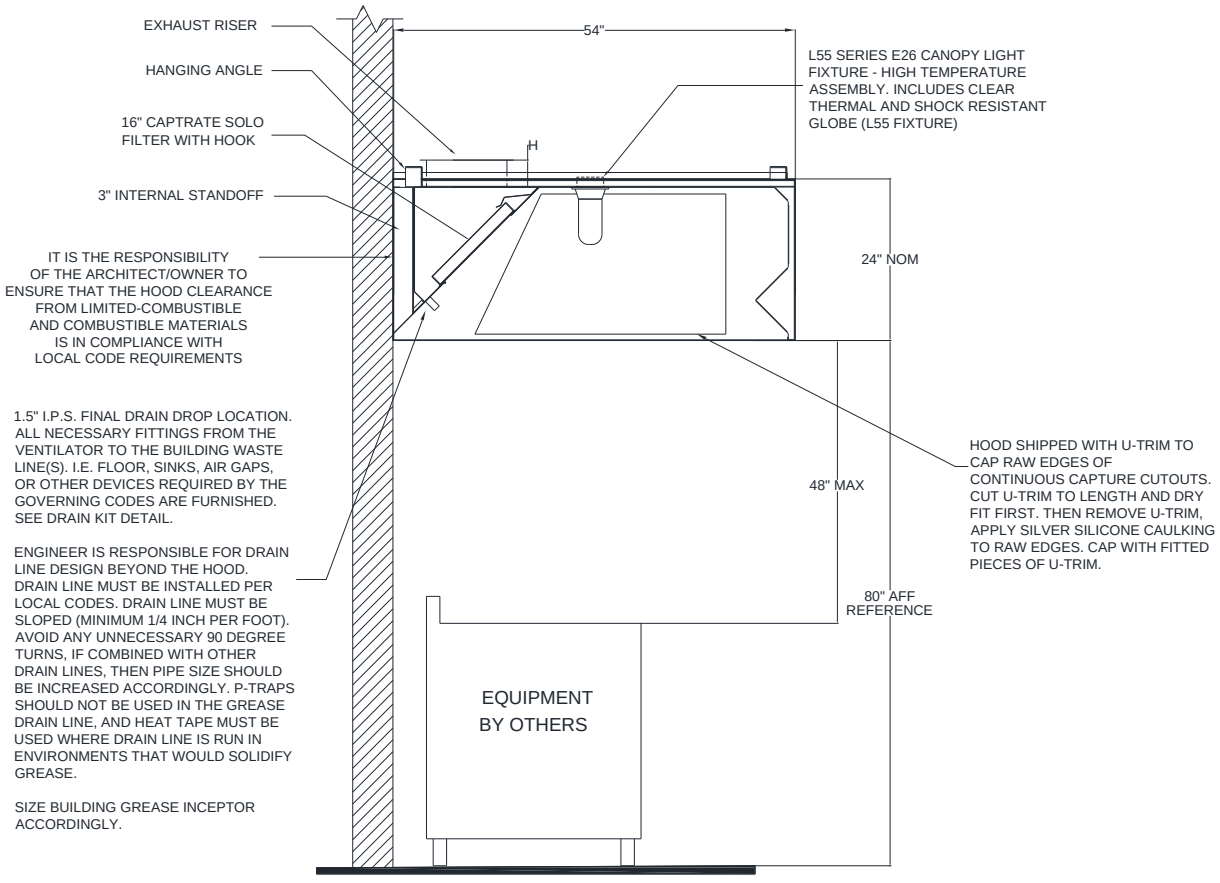

Utility Cabinet

Wall Mount No Hanging Angles

Figure 35 - Wall Mount Option

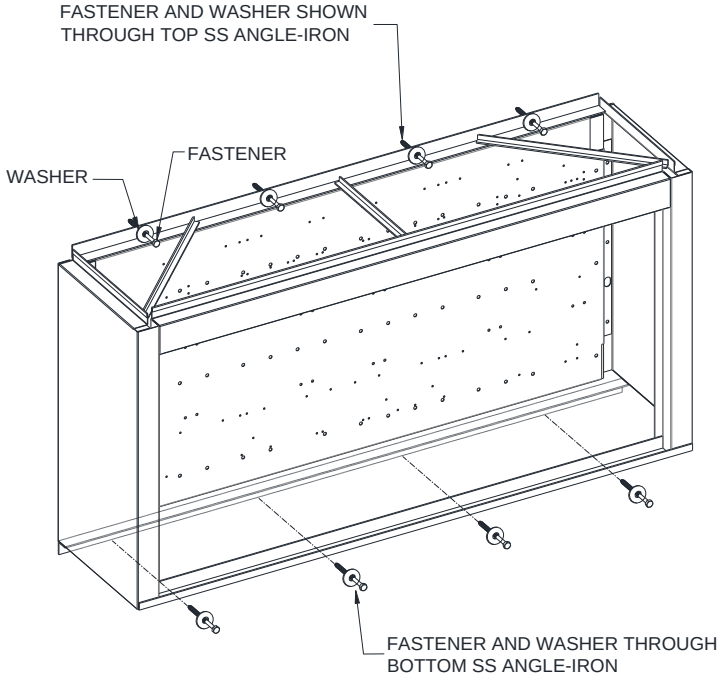

<u>NOTE:</u> WALL-MOUNTED UTILITY CABINETS UP TO 48" LONG, MUST HIT TWO (2) STUDS MINIMUM, FASTENED TOP AND BOTTOM OF THE WALL-MOUNT UTILITY CABINET.

<u>NOTE:</u> WALL-MOUNTED UTILITY CABINETS OVER 48" LONG, MUST HIT THREE (3) STUDS MINIMUM, FASTENED TOP AND BOTTOM OF THE WALL-MOUNT UTILITY CABINET.

Utility cabinet must be secured to the wall with a minimum of eight (8) fasteners and washers.

Top and bottom of cabinet both require four (4) fasteners with washers.
Mark locations on top angle iron and bottom angle iron.
Drill pilot holes for fasteners.

A. When installing into concrete/masonry wall, use 5/16" x 3-1/2” tapcons.
B. When installing into metal studs, use 5/16" x 1-1/2” self-drilling screws.
C. When installing into wooden studs, use 5/16" x 2-1/4” lag bolts.
D. When fastener lands only on drywall, use 5/16" x 4" long toggle bolts.

Wall Mount with Hanging Angles

For wall mount utility cabinets with hanging angles, refer to **Hanging Angle Assembly Instructions** on **page 10**.

OPERATION

Commercial kitchen ventilation hoods are intended to be used in conjunction with ductwork and fans, which have been properly sized and properly installed in accordance with manufacturer's specifications and local code requirements.

Before turning on cooking equipment, make sure that the make-up air and exhaust fans are on. Leave fans on for at least 30 minutes after cooking equipment is shut off.

Clean hood as needed to comply with local code requirements and as directed in the Maintenance section of this manual.

Performance Evaluation

A performance evaluation of the system can be performed only after all of the following items have been verified:

1. All fans are operational and rotations visually verified by observation of the arrows stamped on them.
2. All filters are in place.
3. Equipment under the hood is in place and operational.
4. HVAC units are in place and operational with blowers operating correctly.

Guidelines before Beginning

The testing and balancing of a system is necessary to ensure proper and efficient operation of the system as it was designed. In any building where effluent and hot air is removed, the mass of air must be replaced to maintain a constant pressure in the space. Any change in the pressure differential between inside and outside air will in some way affect the operation of a system; most commonly that affect is a negative one.

A test and balance, as well as the simple performance test in International Mechanical Code Section 507.16.1 should be included in all jobs; code inspectors are increasingly enforcing these requirements. Requirements in the 2006 IMC, which is currently effective in most parts of the United States, are as follows:

> "*507.16 Performance test. A performance test shall be conducted upon completion and before final approval of the installation of a ventilation system serving commercial cooking appliances. The test shall verify the rate of exhaust airflow required by Section 507.13, makeup airflow required by Section 508, and proper operation as specified in this chapter. The permit holder shall furnish the necessary test equipment and devices required to perform the tests.*
>
> *507.16.1 Capture and containment test. The permit holder shall verify capture and containment performance of the exhaust system. This field test shall be conducted with all appliances under the hood at operating temperatures, with all sources of outdoor air providing makeup air for the hood operating and with all sources of recirculated air providing conditioning for the space in which the hood is operating. Capture and containment shall be verified visually by observing smoke or steam produced by actual or simulated cooking, such as with smoke candles, smoke puffers, etc."*

The simplest means of doing the performance test is using a T-T smoke puffer. Activate the puffer and use it to trace effluent around the entire perimeter of the hood, emitting smoke every few inches under the lower edges of the hood.

External Factors which may affect Hood Performance

1. HVAC units are generally specified to supply 25% outside air (OA) to the room ventilation. If RTU's are not supplying the proper amount of OA to the building, then negative pressure will exist.
2. HVAC return grilles located close to a hood can cause performance problems. The return grille competes with the hood to capture air in the room. For example, a return grille for a 10-ton HVAC unit can draw anywhere from 3000 to 4000 CFM. This is equivalent to the exhaust of a 10' to 13' canopy hood. As a result, a return air grille located within six feet (6') of the hood can have a serious effect on the capture ability of the hood.

NOTE: High velocity diffusers or HVAC returns should not be placed within 10 feet of the exhaust hood. Perforated diffusers are recommended.

3. HVAC diffusers located near a hood can create flows in the room that detract from the capture ability of the hood. If the HVAC diffuser bounces air off the front of the hood or directs air along the hood and past the end, the air flow created can draw smoke and contaminants out of the hood.

Using a Shortridge Instrument

The Shortridge is a sophisticated instrument that, with its built-in features, is basically a self-contained test and balance kit. It has a "velocity grid" for filter face readings, a "velocity probe" for ductwork readings, a "differential pressure" function to check room pressure and static pressure, as well as a "temperature probe" so it can calculate accurate values based on varying temperature (most equipment assumes standard temperature and pressure), and many other useful features.

Hood Information

To calculate the CFM, the following information must first be acquired:

1. Hood size and length
2. Filter size and length
3. PSP width and length

Measuring Hood Static and Room Pressure

Static Pressure:

Measure hood static pressure at exhaust collar using the Shortridge instrument.

Static Pressure = _____

Room Pressure:

For an exhaust hood to work properly, the kitchen should be at a slight negative pressure to the dining area (caused by its air removal) and the building overall slightly positive. The dining room should be a slight positive to the outdoors and the kitchen +0.02" w.c. or about 300 CFM positive. This will keep dust and bugs outside and doors will be easy to open. The kitchen should be a slight negative to the dining room to keep the odors in the kitchen. The kitchen should be balanced to slightly negative, 0" to -0.02" w.c., to the dining room. Generally, if there is not enough negative, or if there is positive pressure there will be smoke roll out from the hood that occurs due to the wind currents from people moving around in the area, while if there is too much negative, there becomes a pressure problem on the building(opening doors, drafts, hot water heaters, etc.)

Measure room static pressure using the Shortridge instrument. Adjust the supply fan to set room to 0.02" negative to dining area.

Room Pressure = _____

Calculating Make-up Air CFM

With a Shortridge Instrument and Spreadsheet

1. Use the Velgrid mode of the Shortridge instrument to measure supply air velocity. Make sure to take measurements every twelve (12) inches along the length of the PSP.
2. Locate the appropriate Excel spreadsheet for the PSP/Supply velocity and record all necessary data. This spreadsheet will calculate the total supply CFM for the hood.
3. The spreadsheet is located on the manufacturer's website.

Without a Shortridge Instrument

1. Compute the open area of the supply plenum of the hood. This area must be calculated at the same plane that velocity readings are taken. Area can be calculated using the following formula:

   Area (ft^2) = Length (ft) x Width (ft)

   If both the length and width are measured in inches, use the following formula:

   Area (ft^2) = Length (in) x Width (in) / 144

2. Record velocity of air through supply openings from left to right on raw data sheet.
3. Compute and record average velocity through supply openings.
4. Compute and record CFM through supply openings.

   CFM = Free area x Average Velocity

5. Compute total CFM through all supply openings for each hood.

Calculating Exhaust Air CFM

With a Shortridge Instrument and Spreadsheet

1. Use the Velgrid mode of the Shortridge instrument to measure the velocity at each filter.
2. Locate the appropriate Excel spreadsheet for the exhaust velocity and record all necessary data. This spreadsheet will calculate the total exhaust CFM for the hood.

Without a Shortridge Instrument

1. Record filter sizes of each hood on raw data sheet.
2. Compute free area of the filters.

   Examples:
   16"x16" = 14x14 = 1.36 ft^2
   10"x20" = 8x18 = 1.00 ft^2
   12"x16" = 10x14 = 0.97 ft^2

3. Record velocity of exhaust gases through filters starting top left to right (5 reading/filter).
4. Find average velocity through each filter.
5. Compute CFM through each filter.

   CFM = Free area x Average Velocity

6. Total the exhaust CFM for each hood.
7. Multiply total exhaust CFM x 0.78 (this is the K factor necessary when using the EDRA velometer).

Adjustments

1. A hood with multiple risers should be balanced according to the cooking load beneath it. For example, if a hood with multiple risers has a charbroiler in the center and several ovens on the ends, the risers should be evenly balanced. This will achieve the most efficient contaminant capture.
2. Perforated supply plenums discharging air around the hood should be set to the designed discharge velocity.
3. When fan pulleys are adjusted, belts should then be re-checked for correct tension and an amperage reading should be taken on the motor to make certain it is not overloaded.
4. The prime objective of balancing is to ensure that each hood will capture all the contaminants produced by the equipment it covers without causing undesirable conditions in the kitchen (i.e. excessive negative pressure, excessive quantities of hot or cold air in the kitchen, etc.)

If problems occur, then refer to the Troubleshooting Section of this manual.

Conclusion

1. Compare specified data to the data recorded. Adjust exhaust as necessary using adjustable pulley on fan. Adjust supply as necessary using dampers on supply risers and adjustable pulley on supply fan.
2. After setting hoods to specified data, the room parameters should be checked.
3. If room parameters are not acceptable yet, the hood can be modified to improve them without decreasing hood performance. This is an acceptable condition.
4. Use a smoke bomb to verify that the hood captures adequately. This can be your final verification.

Complete Equipment List for Performance Evaluations

- Closed End Wrenches (9/16, ½, 7/16, 3/8, 5/16, ¼)
- Socket Set & Ratchet (9/16, ½, 7/16, 3/8, 5/16, ¼)
- Extension for Ratchet
- Cheater Bar
- Screwdrivers (Phillips & Standard, Short & Long)
- Adjustable Wrenches (Large & Small)
- 5/32” 9” Long Allen Wrench
- Multi-key Hex Set (Standard Assortment)
- Tape Measure, Hammers (Hard & Soft)
- 2-Channel Locks
- Vise-Grip Pliers (Medium Size)
- Shortridge Air Multimeter
- Velometer or similar unit, Edra 5LV or Davis LCA6000 recommended
- Manometer or similar unit, Dwyer Magnehelic Model #2000-00 recommended
- Work Gloves
- 6’ Step Ladder
- 20’ Extension Ladder
- Tachometer (Mechanical)
- Amprobe (Volt & Amp Meter)

Troubleshooting

The following table lists causes and corrective actions for possible problems with exhaust hoods. Review this list prior to consulting manufacturer.

Troubleshooting Chart

Problem	Potential Cause	Corrective Action
Smoke is not being captured/Low Exhaust	Filters are clogged	Clean filters, refer to Recommended Cleaning Agents on **page 42**.
	Extreme negative pressure in space	Increase MUA Quantity to balance building
	Exhaust Fan operating in incorrect direction	Check motor wiring to wiring diagram located on fan motor
	Hood overhang on appliance is not correct	Hood should overhang cooking appliances adequately
	Exhaust airflow too low	Increase exhaust fan RPM/HP
	Exhaust Duct Static Pressure higher than design	Increase exhaust fan RPM/HP or have ductwork re-worked
No Exhaust	Exhaust Fan not running	Turn fan disconnect on
		Check fan belts
		Check circuit breaker/voltage
	Exhaust Fan running backwards	Wheel should turn per rotation arrow on fan
		3 Phase Motor direction may be reversed by switching any 2 leads
		1 Phase Motors must be wired per their label
	Fan is on incorrect hood	Make sure electrical package is controlling the correct fan
No Make-Up Air	Make-Up Air Fan not running	Turn Fan disconnect on
		Check fan belts
		Check circuit breaker/voltage
	Make-Up Air Damper closed	Ensure blades open on damper
	Make-Up Air Fan running backwards	Wheel should turn per rotation arrow on fan
		3 Phase Motor direction may be reversed by switching any 2 leads
		1 Phase Motors must be wired per their label
	Make-Up Air Duct Static Pressure higher than design	Eliminate flexible ductwork and remove number of elbows in duct.
	Clogged Make-Up Air Filters	Clean filters, refer to Recommended Cleaning Agents on **page 42**.
	Fire System activated or not armed	Microswitch on Fire System is keeping make-up air from operating and fire system must be armed
Exhaust/Make-Up Air Motor cycles on and off	Motor Over-amping	Make sure motor amperage is below FLA of motor label
		Ensure motor wiring is adequately sized
	Exhaust air temperature too high	Increase exhaust airflow or use higher temperature rated motor
Grease does not drain	Grease trough full	Clean grease trough behind hood filters
Grease dripping from hood	Hood not being cleaned often enough	Clean surface of hood more frequently
	Exhaust rate too low	Speed up exhaust fan
Hood is vibrating	Vibrating Exhaust or MUA Fan	Find source of vibration in fans and correct (Often times a rag or other debris will be in exhaust fan wheel)
Light Globes are full of fluid	Duct Leak above hood	Check ductwork or fan to roof connection for leaks and seal where necessary

MAINTENANCE

To guarantee trouble free operation of this hood, the manufacturer suggests following these guidelines. Most problems associated with hoods are directly related to poor service and maintenance such as not replacing or cleaning filters.

Please record any maintenance or service performed on this fan in the documentation section located at the end of this manual.

General Maintenance

1. Proper operation of the hood depends on how well the hood is maintained. All surfaces should be kept free of grease build-up for sanitation reasons and to reduce the risk of fire.
2. Grease filters must always be installed and clean to reduce build-up of grease in the exhaust duct and to allow for proper exhaust airflow (refer to Recommended Cleaning Agents on **page 42**). Maintain all belts, motors, and electrical connections on fans attached to the hood. Ensure MUA filters are kept clean and there are no leaks in MUA ductwork.

Daily Maintenance

1. Remove the grease baffle filters and clean in a dishwasher or soak sink daily

   (Refer to Recommended Cleaning Agents on **page 42**).
2. Empty and clean grease drain and grease collection cups.
3. Carefully wipe away gritty substances clinging to stainless steel surfaces to avoid scratching.
4. Dilute ½ cup of laundry detergent (e.g. Tide) with one (1) gallon of warm water.
5. Soak a clean cloth in the water detergent solution and wring out the excess water.
6. Wipe the hood surfaces moving in the direction of the grain and periodically rinsing cloth in detergent solution.
7. Using a different clean cloth soaked in clean warm water, wipe the hood surfaces to remove all traces of the detergent solution.
8. Wipe hood surfaces dry with a clean, dry cloth. Clean the hood temperature sensor in riser if equipped with one.
9. Reapply stainless steel polish.

CAUTION

DO NOT use iron wool (Brillo or SOS pads), scrapers, or spatulas to clean hood!

DO NOT use the following substances on or around the hood:

1. Chlorine or chlorine based substances.
2. Acids (e.g. acetic, hydrochloric, sulfuric).
3. Chloride based substances (e.g. mercuric chloride, ferric chloride).

Vapors of the above substances can corrode stainless steel!

Quarterly Maintenance

1. Inspect the unit and duct for grease or air leaks and repair leaks where required.
2. Clean ductwork attached to hood to prevent a mass accumulation of grease.

PSP/AC-PSP Perforated Screen Cleaning and Maintenance

If airflow diminishes or the perforated assembly appears clogged or dirty, follow these steps to clean the area.

Note: You must wear protective gloves during this procedure.

1. Check supply fan. Clean as needed, repair if any damage is found.
2. Check filters. Clean and replace as needed.
3. Check volume dampers to ensure they are set correctly and have not been closed.
4. Remove perforated assemblies from PSP/AC-PSP.
   - Loosen the screws. The screws will have capture washers on the back. These are used to secure the center blank.
   - Remove the center blank. Grasp the perforated assembly and quickly pull, releasing the perforate assembly from the snap clips.
5. Clean perforated assemblies and wipe dry before reinstalling. **Do Not Use Chlorine, Bleach or Other Corrosive Cleaners.**
6. Carefully reinstall perforated assembly and secure with snap clip.
7. Place center blank back into location. Secure with capture washers and screws.

Figure 36 – Perforated Supply

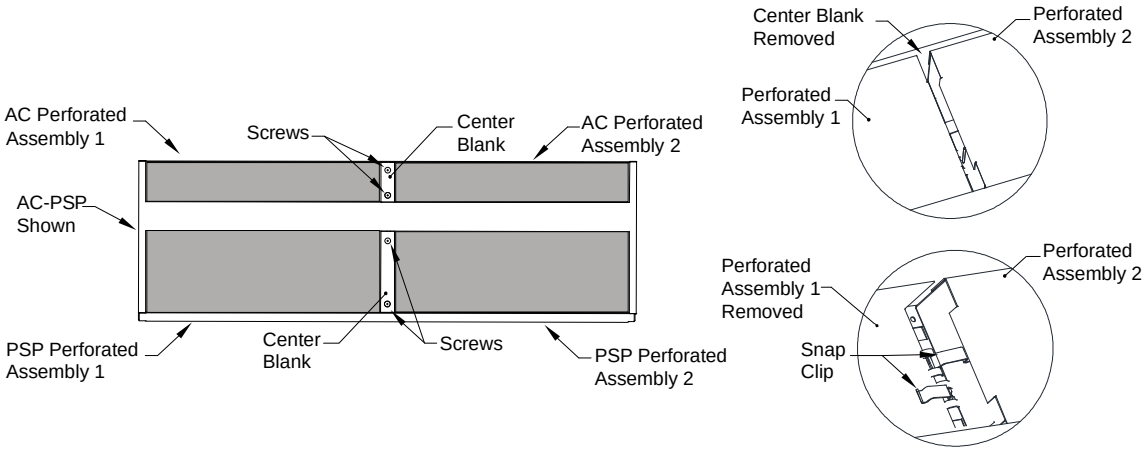

Recommended Cleaning Agents

Cleaning Method/Agent Type	Supplier	Product
Dishwasher Detergent	Ecolab	Solid Powder/Plus
	Johnson Diversey	Suma DiverPak/Plus
Soak Method – Pot and Pan Detergent	Ecolab	Powder Detergent
Soak Method – Commercial Degreaser	Ecolab	DeCarbonizer MPX
	Johnson Diversey	Soak Tank Solution
	Zep	ZEP FS Pot Scrub
Heavy Duty Commercial Degreaser	Ecolab	Grease Cutter Plus
	Johnson Diversey	Suma Star
	Zep	ZEP FS C.I.P. Cleaner

Recommended Commercial Soak Tanks

Description	Supplier	Product	Contact
Heated Soak Tank	Hyginix	FOG Tank® [Use only Tiger Carbon Powder Remover®]	www.fogtank.com (858) 566-6212 info@fogtank.com

Start-Up and Maintenance Documentation

START-UP AND MEASUREMENTS SHOULD BE PERFORMED AFTER THE SYSTEM HAS BEEN AIR BALANCED (Warranty will be void without completion of this form)

Job Information

Job Name	
Address	
City	
State	
Zip	
Phone Number	
Fax Number	
Contact	
Purchase Date	

Service Company	
Address	
City	
State	
Zip	
Phone Number	
Fax Number	
Contact	
Start-Up Date	

Hood Information

Refer to the start-up procedure in this manual to complete this section.

Name Plate and Unit Information	
Model Number	
Job Number	

Maintenance Record

Date	Service Performed

Date	Service Performed

Factory Service Department

Phone: 1-866-784-6900
Fax: 1-919-554-9374

Commercial Kitchen Hoods

Installation, Operation, and Maintenance Manual

RECEIVING AND INSPECTION

Upon receiving unit, check for any interior and exterior damage, and if found, report it immediately to the carrier. Also check that all accessory items are accounted for and are damage free.

WARNING!!

Installation of this unit should only be performed by a qualified professional who has read and understands these instructions and is familiar with proper safety precautions. Read this manual thoroughly before installing or servicing this equipment.

Save these instructions. This document is the property of the owner of this equipment and is required for future maintenance. Leave this document with the owner when installation or service is complete.

A0011051
February 2019 Rev. 25

TABLE OF CONTENTS

WARRANTY 4
CERTIFICATIONS AND PATENTS 4
Listing 4
Patents 4
INSTALLATION 5
Site Preparation 5
Clearance Reduction Methods 6
Installation of a Single Hood (Wall or Island) 7
Hanging Angle Assembly Instructions 10
Side View of Typical Hood 11
End-to-End Hoods 12
Hanging Detail for Multiple Hood Models Hung End-to-End 12
Hood Connection Detail for Multiple Hood Models 13
Back-to-Back Hoods 14
Guidelines for Ductwork Installation 15
Installation of Hood Accessories 16
Back Return Installation 16
Section View of Typical Hood with Back Return 17
Bolt-Together Standoff Installation 18
Single PSP/AC-PSP Installation 19
Multiple PSP/AC-PSP Installation 20
Wrapper (Enclosure Panel) Installation 22
End Panel Installation 26
Quarter End Panel Installation 27
Insulated End Panel Installation 28
Vertical End Panel Installation 29
Backsplash Installation 30
Insulated Backsplash Installation 31
Pizza Oven Top Mount Flange Installation 32
Plate Shelf Option Installation 33
Continuous Capture 34
Utility Cabinet 35
OPERATION 36
Performance Evaluation 36
Guidelines before Beginning 36
External Factors which may affect Hood Performance 37
Using a Shortridge Instrument 37
Calculating Make-up Air CFM 38
Calculating Exhaust Air CFM 38
Adjustments 39
Conclusion 39
Complete Equipment List for Performance Evaluations 39
Troubleshooting 40
Troubleshooting Chart 40
MAINTENANCE 41
General Maintenance 41
Daily Maintenance 41
Quarterly Maintenance 41
PSP/AC-PSP Perforated Screen Cleaning and Maintenance 42
Recommended Cleaning Agents 42
Start-Up and Maintenance Documentation 44
Job Information 44
Hood Information 44
Maintenance Record 44
Factory Service Department 44

WARRANTY

This equipment is warranted to be free from defects in materials and workmanship, under normal use and service, for a period of 24 months from date of shipment. This warranty shall not apply if:

1. The equipment is not installed by a qualified installer per the MANUFACTURER'S installation instructions shipped with the product.
2. The equipment is not installed in accordance with federal, state and local codes and regulations.
3. The equipment is misused or neglected, or not maintained per the MANUFACTURER'S maintenance instructions.
4. The equipment is not operated within its published capacity.
5. The invoice is not paid within the terms of the sales agreement.

The MANUFACTURER shall not be liable for incidental and consequential losses and damages potentially attributable to malfunctioning equipment. Should any part of the equipment prove to be defective in material or workmanship within the 24 month warranty period, upon examination by the MANUFACTURER, such part will be repaired or replaced by MANUFACTURER at no charge. The BUYER shall pay all labor costs incurred in connection with such repair or replacement. Equipment shall not be returned without MANUFACTURER'S prior authorization and all returned equipment shall be shipped by the BUYER, freight prepaid to a destination determined by the MANUFACTURER.

CERTIFICATIONS AND PATENTS

Listing

This hood is ETL-listed to standard UL710, ULC710, and ULC-S646 when installed in accordance with these installation instructions and National Fire Protection Association Standard "NFPA 96, Standard for Ventilation Control and Fire Protection of Commercial Cooking Operations."

Patents

The dual supply plenum controlling Make-Up Air and Air Conditioned Air is covered under the following patents: System for Directing and Controlling Two Separate Streams of Air to a Kitchen: United States Patent No. 7963830 B2; Canadian Patent No. CA2820509; Patent No. CA2520330

Exhaust Hoods are covered under the following patent: Kitchen Exhaust Hood Assembly having Components secured together by Threaded Studs: Canadian Patent No. CA2520435C

INSTALLATION

It is imperative that this unit is installed and operated with the designed airflow, filters and construction in accordance with this manual. If there are any questions about any items, please call the service department at **1-866-784-6900** for warranty and technical support issues.

WARNING: IMPROPER INSTALLATION, ADJUSTMENT, ALTERATION, SERVICE OR MAINTAINANCE CAN CAUSE PROPERTY DAMAGE, INJURY OR DEATH. READ THE INSTALLATION, OPERATION AND MAINTENANCE INSTRUCTIONS THOROUGHLY BEFORE INSTALLING OR SERVICING THIS EQUIPMENT.

Site Preparation

1. Provide clearance around installation site to safely rig and lift equipment into its final position. Consider general service and installation space when locating unit.
2. Locate unit close to the space it will serve to reduce long, twisted duct runs.
3. Thoroughly review the plans and specifications of the project.
4. Determine the exact location in which the cooking hood will be installed and verify that there are no interferences which will prevent proper installation.
5. Verify that all overhead beams and angles are structurally strong enough to support the weight of the hood and hanging system. It is often necessary to strengthen existing structural beams, as they are not designed to carry the weight of a stainless steel hood. Refer to the project submittal drawing for hood weight(s). It may also be necessary to create a support structure suspended from the ceiling joists to better align with the desired hood location.
6. Determine if adequate room is available to install the hood and all ductwork with proper clearances from combustible material. IMC, NFPA96 and local authorities having jurisdiction call for a minimum clearance (typically 18 inches for type 1, grease rated hoods) between the cooking hood(s), exhaust ducts, and building materials which are combustible. However, IMC and NFPA96 outline acceptable clearance reduction methods; **most authorities accept the clearance reduction methods approved in the manufacturer's ETL listing for Type 1, grease rated hoods. Refer to Figure 1**. It is important to check with the local authority having jurisdiction to determine that the installation method is satisfactory to meet their requirements prior to installing the equipment.

FOLLOW SMACNA GUIDES AND RECOMMENDATIONS FOR THE HANGING AND INSTALLATION OF HOODS.

Clearance Reduction Methods

Clearance reduction methods have been evaluated and tested and are certified by ETL. The method of test was derived from UL 710 with temperature criteria taken from appropriate standards.

The hood may be installed with a 0 inch clearance to combustible materials per ETL if constructed in one of the following methods:

- 1 inch thick min. layer of insulation of type Owens Corning Type 475 or Johns Manville Type 475 or listed kitchen exhaust duct insulation.
- 1 inch thick min. insulated backsplash. Insulation of type listed above.
- Back Return (BR) supply plenum with 1 inch thick min. insulation of type listed above.

To comply with the ETL certification, the cooking appliance must be located:

- At least 6 inches from the rear wall.
- At least 24 inches below the bottom edge of the hood.
- Cooking surface must not exceed temperatures above 700°F.

The hood may be installed with a 3 inch clearance to limited combustible materials per NFPA96 if constructed in one of the following methods:

- 3 inch factory installed rear un-insulated standoff.
- 3 inch factory installed top wrapper or enclosure panel system.
- 3 inch factory installed end standoff.
- Any insulated surface on the hood can be in contact with a combustible wall or structure.
- Hood surfaces perpendicular to combustible walls or structures do not need to be insulated to maintain the zero inch clearance rating.
- Only the surface of the hood against a combustible wall or structure must be insulated.

For example, on a combustible back wall, only the back of the hood needs to be insulated, even if the back wall extends beyond the back of the hood in any direction.

Figure 1 – Clearance Reduction Options

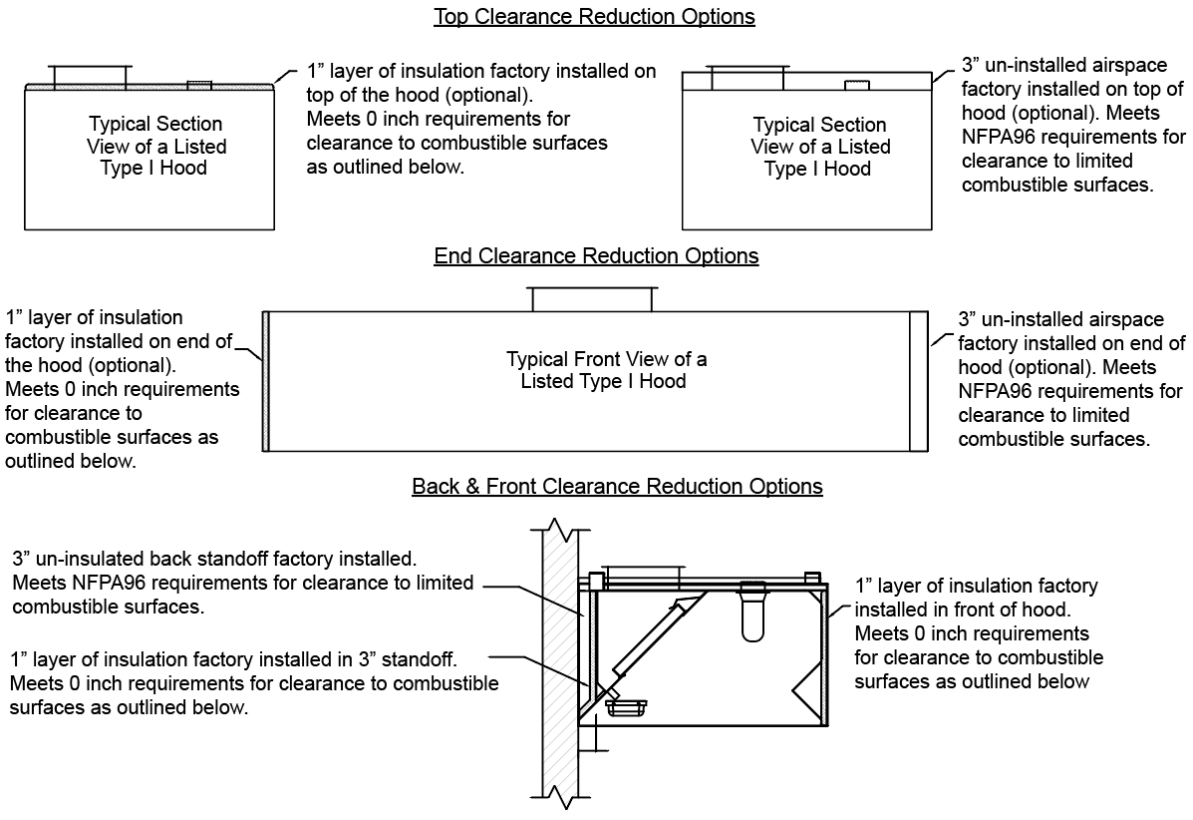

Installation of a Single Hood (Wall or Island)

The following is a step-by-step procedure for installation of the ventilation hood.

NOTE: Report any damage to the delivering freight carrier and file a claim if appropriate.

1. Uncrate the hood, being very careful not to dent or scratch the outer surface. Refer to the installation drawing for typical details of the ventilation system prior to hanging the hood. Check the nameplate on the equipment to make certain it meets the specifications provided by the architect and/or engineer. **If discrepancies exist, notify the manufacturer immediately**.

   The nameplate will also give information regarding the following:
   - Clearance from cooking surface to front lower edge of the hood
   - Minimum exhaust air flow
   - Maximum supply air flow (if applicable)
   - Minimum front overhang from cooking surface
   - Minimum side overhang from cooking surface
   - Maximum cooking surface temperature
   - Replacing fusible links for exhaust and supply damper (if applicable)
   - Replacing filters

2. Determine the height at which the hood will be hung:

   Canopy hoods are typically hung so that the front lower edge of the hood is within 6'-6" to 7'-0" AFF. However, the hood should be hung so that the proper clearance from the cooking surface to the front lower edge of the hood is maintained. See nameplate for clearance from cooking surface to front lower edge of hood. Exact hood hanging height should be verified with local authorities having jurisdiction.

   NOTE: If there are wrappers (enclosure panels) with the order, measure down from the ceiling the height of the wrappers. That will be the top hanging height of the hood as long as the following criteria are met:

   - The front lower edge of the hood is within 6'-6" to 7'-0" AFF,
   - The front lower edge of the hood is within the clearance requirement from the cooking surfaces, and
   - If the hanging height based on wrappers does not fall in this range, contact your local office.

   Backshelf hoods are typically hung at the maximum height allowed from the cooking surfaces. See nameplate for clearance from cooking surface to front lower edge of hood. Exact hood hanging should be verified with local authorities having jurisdiction.

   NOTE: If there are wrappers with the order, measure down from the ceiling the height of the wrappers. That will be the top hanging height of the hood as long as the front lower edge of the hood is within the clearance requirement from the cooking surfaces. If the hanging height based on wrappers does not fall in this range, contact your local office.

3. If the hood has a back return, install it now. See **page 16** for Back Return Installation.

4. If the hood has a bolt-together standoff, install it now. See **page 18** for Bolt-Together Standoff Installation.

5. If the hood has duct thermostats, install them now per the thermostat installation drawing.

6. Position hood on the floor in its approximate final position with the supply and exhaust risers on the hood located directly beneath the corresponding openings in the roof, if possible. It is advisable to finalize the location using a plumb-bob or laser. **Protect the hood when it is on the jacks to avoid dents, scratches, and other damage to the hood**.

WARNING: VERTICALLY OR HORIZONTALLY LAGGING HOODS TO WOODEN JOISTS, TRUSSES, OR STUDS IS AN UNACCEPTABLE METHOD FOR HANGING HOODS. THIS WILL LEAD TO BOTH STRUCTURAL AND THERMAL FAILURE CAUSING INJURY AND/OR DEATH.

7. Proceed to weld exhaust duct to hood while on the floor, if possible.
8. Use 1/2" threaded rod to hang hoods. Drill 9/16" holes in the structural support system or use Unistrut® to line up with the welded-on angle mounting brackets on the hood. There are several types of mounting brackets depending upon the hood type; each, however, has a predrilled hole. See **Figure 2** for details. **The structural integrity of the structural support system is the responsibility of the contractor and the structural engineer.** There are also center hanging angles on hoods 12 feet in length and longer. **Center hanging angles must be used to support the hood weight and prevent filter fit and grease drainage problems**. Some backshelf hoods do not have hanging angles and must be anchored to back wall using the standing flange provided. Structural lag bolts must be used every 12 inches on center maximum and must be secured to studs behind wall. Refer to **Figure 2**.
9. The spacing on the hole for the modified support should line up with the mounting bracket on top of the hood. The top hanger should be 1/2" closer to the back wall than the mounting bracket on the hood to pull the hood against the wall. Refer to **Figure 3**. Some hoods are designed for island installations where a wall is not present.
10. With the hood well protected against possible scratching, raise the hood into position using high lifts or equipment jacks at each end to keep the hood level. When the hood is elevated to the proper height, install 1/2" threaded rod between each mounting bracket on the hood and the modified support. Secure rods with heavy duty nuts and appropriately sized fender washers above and below the hanging angle.
11. Make final adjustments as needed to ensure the hood is hung level. Maintain tension on all rods to ensure the hood weight is evenly distributed. If it is necessary to stand or work on top of the hood, use pieces of plywood to evenly distribute weight on the hood so no damage occurs.
12. Brace hood to ceiling joists and wall(s), as applicable, so that the hood does not move. Secure hood to wall in a manner acceptable to the authority having jurisdiction.
13. If installing a single PSP/AC-PSP to the hood, install it now. See **page 21** for Single PSP/AC-PSP Installation.
14. If the hood has multiple Perforated Supply Plenums (i.e. PSPs) or AC-PSPs, install them now. See **page 19** for Multiple PSP/AC-PSP Installation.
15. Install the exhaust ductwork. The entire exhaust duct system must be continuously welded, liquid tight unless it is Listed Factory Built Grease Duct. The duct must be welded to the hood exhaust collar and the roof curb cap must be welded to the exhaust duct. See **page 15** for Guidelines for Ductwork Installation.
16. Install the supply ductwork. See **page 15** for Guidelines for Ductwork Installation.
17. If the hood is equipped with a control unit, an installation wiring diagram will be provided inside of the control unit. The jobsite electrician is responsible for making the appropriate field connections. This includes all lights and duct/hood mounted thermostats.

    All field wiring on top of the hood must use high temp wire and wire nuts (black). Wiring must be routed through hard or flex conduit. Route and attach all conduit on top of, or above, structural joists (Hat Channel) on top of hood. Conduit cannot contact the surface of the hood ceiling.

18. If the hood is equipped with a factory pre-piped fire suppression system, a certified fire system installer is responsible for completing the field hookup, testing, and certifying the system in accordance with the manufacturer's specifications and the local fire codes. If the hood is not pre-piped, a certified fire system installer is responsible for installing, testing and certifying the system in accordance with the manufacturer's specifications and the local fire codes.
19. If the hood is equipped with wrappers (enclosure panels), end panels, and/or backsplash panels, install them now. See **pages 22** through **31** for Panel Installations.
20. Caulk the lower edge of the hood where it meets the wall. This does not apply to hoods installed in island configurations.
21. Install light bulbs, light globes, and grease filters in the hood.
22. Install grease cups in the brackets/slots provided.
23. Use a stainless steel polish to clean the hood of dust or dirt acquired in transit.
24. It is recommended that the protective plastic sheeting remain on the installed hood until construction is complete, so as to avoid any damage to the equipment.

WARNING: NEVER PUNCTURE THE HOOD GREASE CONTAINMENT AREA TO HANG HOOD OR TO HANG ITEMS FROM HOOD. PUNCTURING THE GREASE CONTAINMENT AREA WILL VOID WARRANTY AND LISTING ON HOOD.

Hanging Angle Assembly Instructions

- Hanging angle must be supported with 1/2" - 13 TPI grade 5 (minimum) all-thread.
- Sandwich hanging angles and ceiling anchor points with 1/2" grade 5 (minimum) steel flat washers and 1/2" - 13 TPI grade 5 (minimum) hex nuts as shown.
- Must use doubled hex nut configuration beneath hood hanging angles and above ceiling anchors (single hex nut beneath hanging angle is only acceptable for full length and PSP hanging angle types).
- Maintain 1/4" of exposed threads beneath bottom hex nut.
- Torque all hex nuts to 57 ft-lbs.

Figure 2 – Hanging Angle Assembly Detail

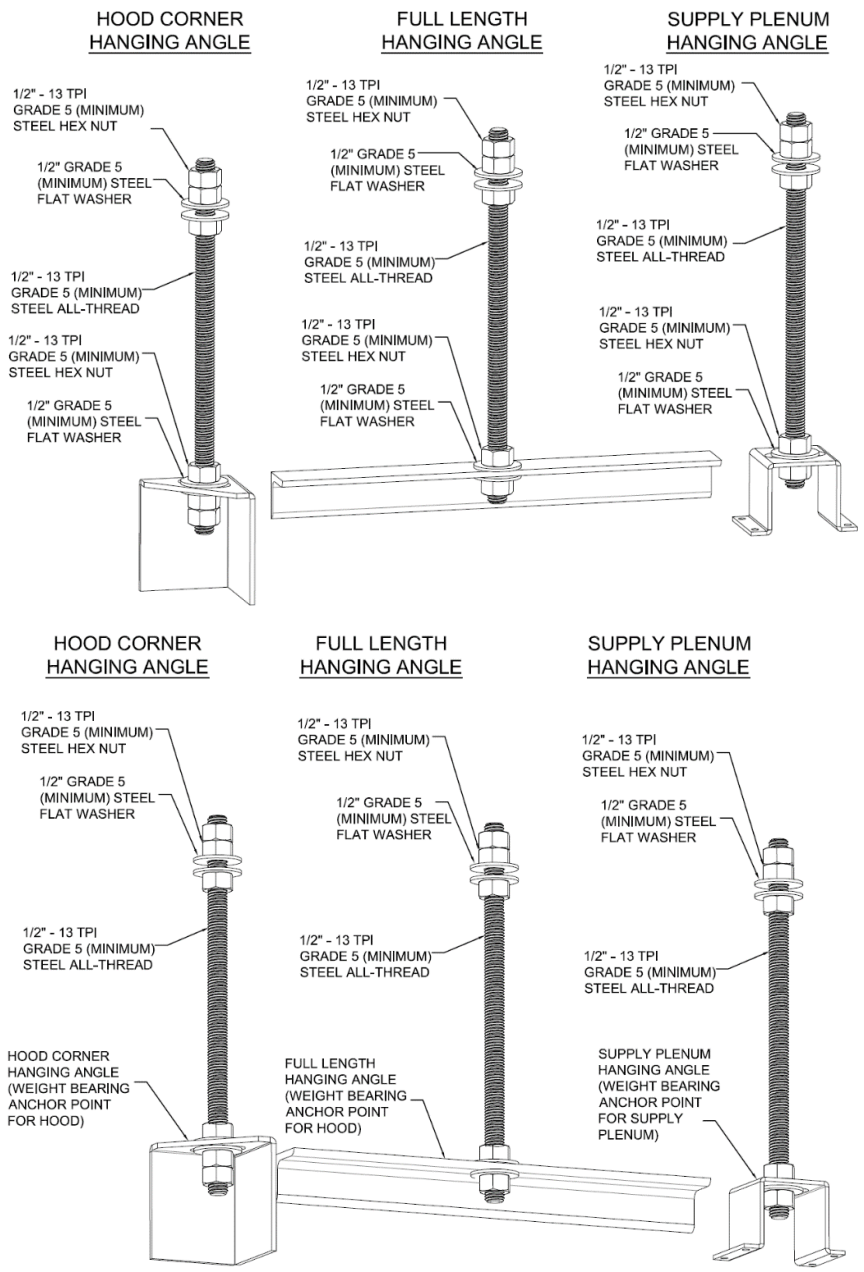

WARNING: VERTICALLY OR HORIZONTALLY LAGGING HOODS TO WOODEN JOISTS, TRUSSES, OR STUDS IS AN UNACCEPTABLE METHOD FOR HANGING HOODS. THIS WILL LEAD TO BOTH STRUCTURAL AND THERMAL FAILURE CAUSING INJURY AND/OR DEATH.

Side View of Typical Hood

Figure 3 – Typical Hood Side View

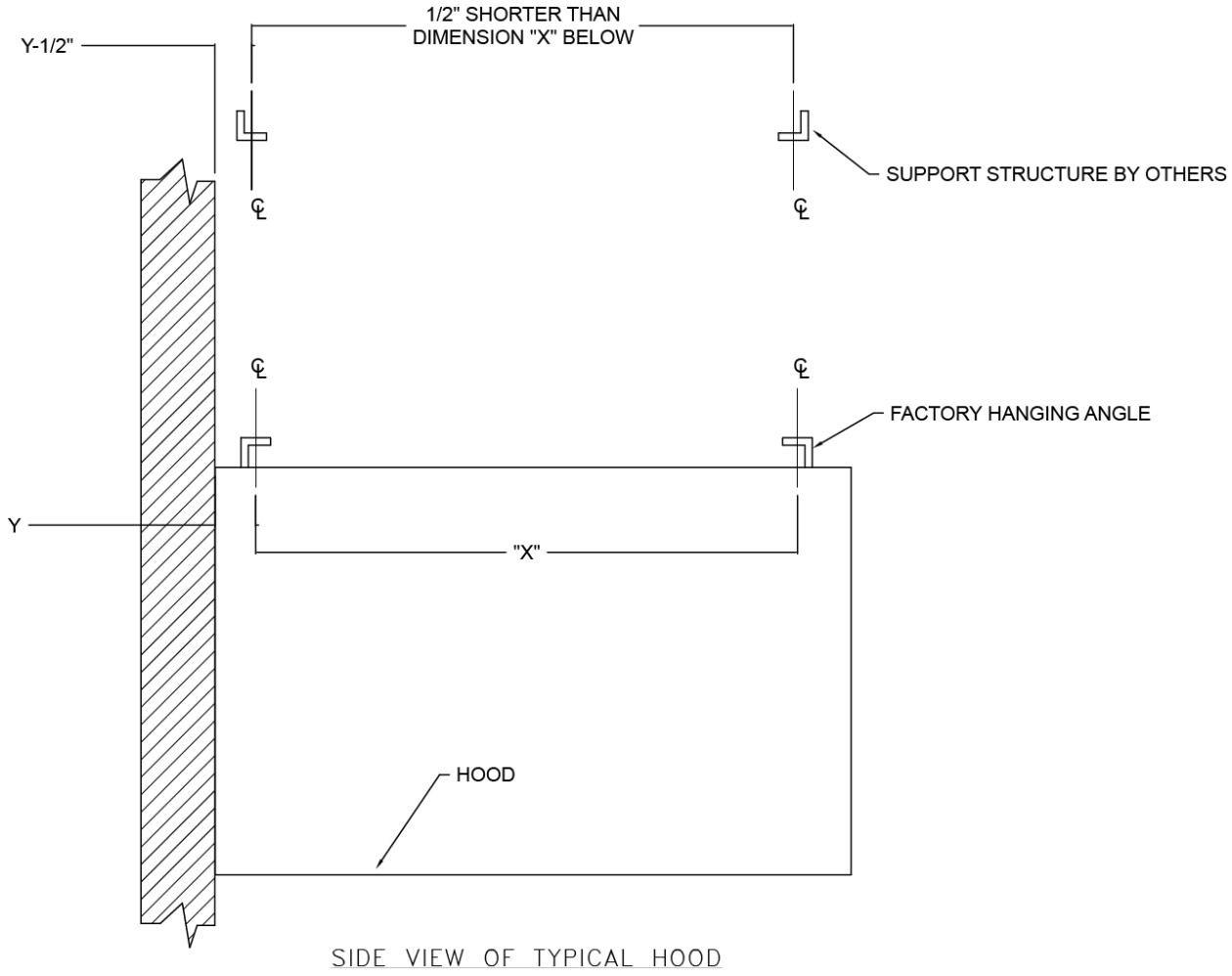

End-to-End Hoods

The following is a step-by-step procedure for installation of end-to-end ventilation hoods. Refer to **Figure 4** through **Figure 7.**

1. Follow steps 1 through 10 of the Installation of a Single Hood (Wall or Island) on **page 7** for each hood.
2. Adjust tension on hanging rods to position hoods so they fit flush with each other as shown in **Figure 4** and **Figure 5**.
3. Bolt the top of the hoods together. Refer to **Figure 6** and **Figure 7**.
4. Once all of the hoods are hung, follow steps 11 through 19 of the Installation of a Single Hood (Wall or Island).
5. **NOTE: Hoods having more than a 1/8" gap between them must be repositioned so that gap between hoods is <= 1/8". Run a bead >=1/8" of silicone sealant along the lower horizontal seam of the two hoods. Slip the U-channel trim, if applicable, over the seam as shown in Figure 4 and 5. Tape can be used to hold the U-channel in place until the silicone cures. U-channel is not required on hoods with Flanged ends.**
6. Run a bead of the same silicone sealant along the front vertical seam between the two hoods. Slip the T-strip trim between the hoods if applicable. Refer to **Figure 4** and **Figure 5**. **T Strip is not required on hoods with flanged ends and fully welded, ground, and polished corners.**
7. Proceed with steps 20 through 24 of the Installation of a Single Hood (Wall or Island).

Hanging Detail for Multiple Hood Models Hung End-to-End

Figure 4 – Hemmed Ends

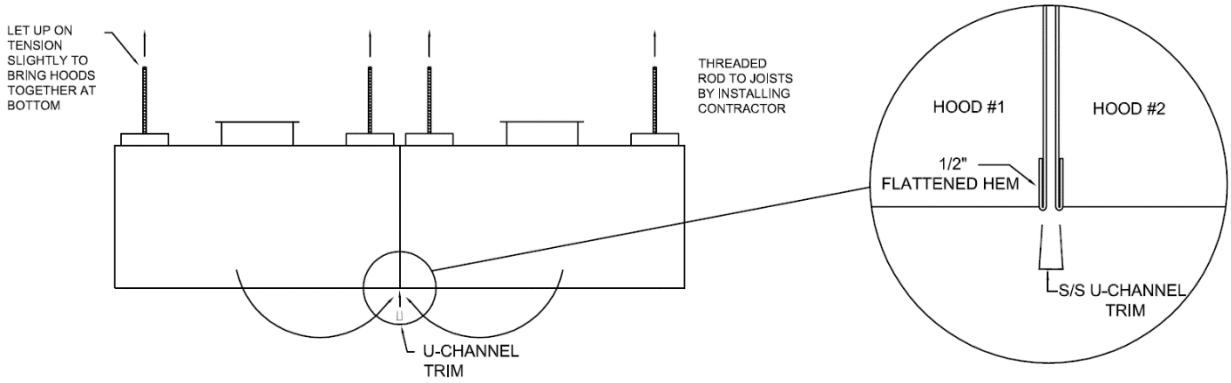

Figure 5 - Flanged Ends

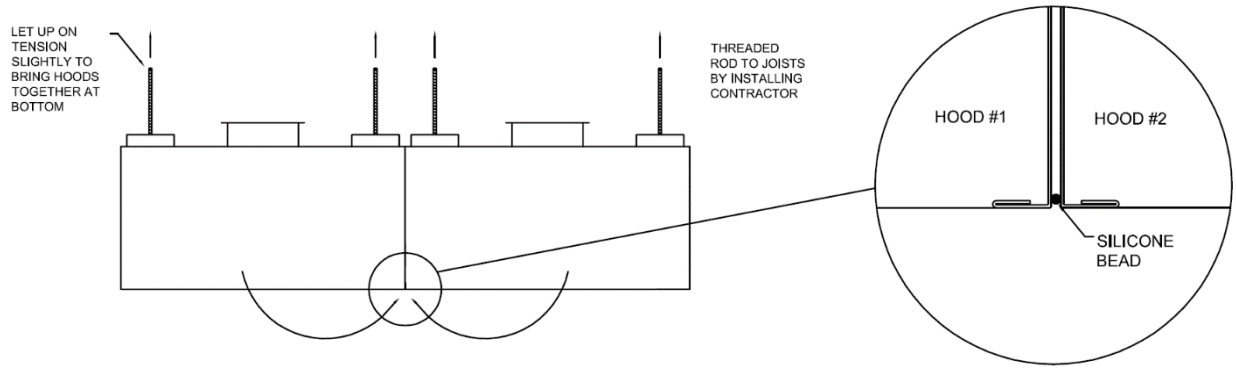

Hood Connection Detail for Multiple Hood Models

Figure 6 – Hemmed Ends with Trim Strip

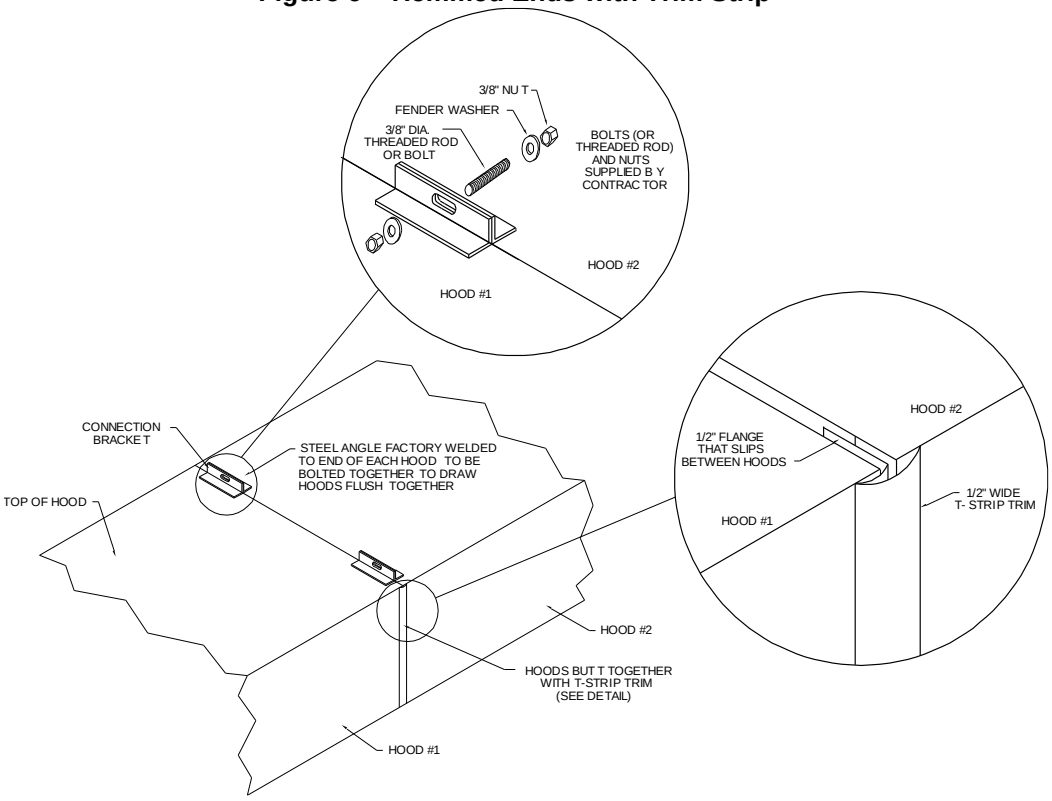

Figure 7 - Flanged Ends w/out Trim Strip

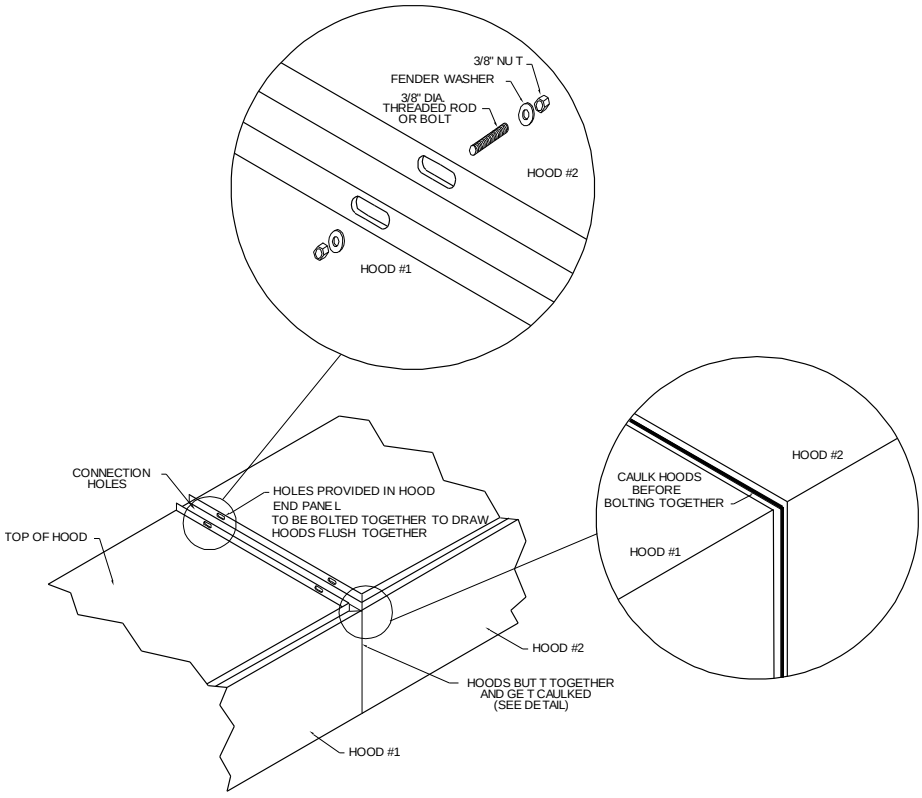

Back-to-Back Hoods

The following is a step-by-step procedure for installation of back-to-back ventilation hoods. Refer to **Figure 6** through **Figure 8.**

1. Follow steps 1 through 10 of the Installation of a Single Hood (Wall or Island) **page 7** for each hood.
2. Adjust tension on hanging rods to position hoods so they fit flush with each other as shown in **Figure 8**.
3. Bolt the top of the hoods together by sliding a threaded rod through the connection bracket slots and fastening it into position by using heavy duty nuts and washers. Refer to **Figure 6** and **Figure 7**.
4. Once all of the hoods are hung, follow steps 11 through 19 of the Installation of a Single Hood (Wall or Island).
5. Run a bead >=1/8" of silicone sealant on the lower horizontal seam between the two hoods. Slip the U-channel over the seam as shown in **Figure 8**. Tape can be used to hold the U-channel in place until the silicone cures.
6. Run a bead of the same silicone sealant along the side vertical seam between the two hoods. Slip the T-strip trim between the hoods. Refer to **Figure 6** and **Figure 7**. **T Strip is not required on hoods with flanged ends and fully welded, ground, and polished corners.**
7. Proceed with steps 20 through 23 of the Installation of a Single Hood (Wall or Island).

Figure 8 - Hanging Detail for Hoods Hung Back-to-Back

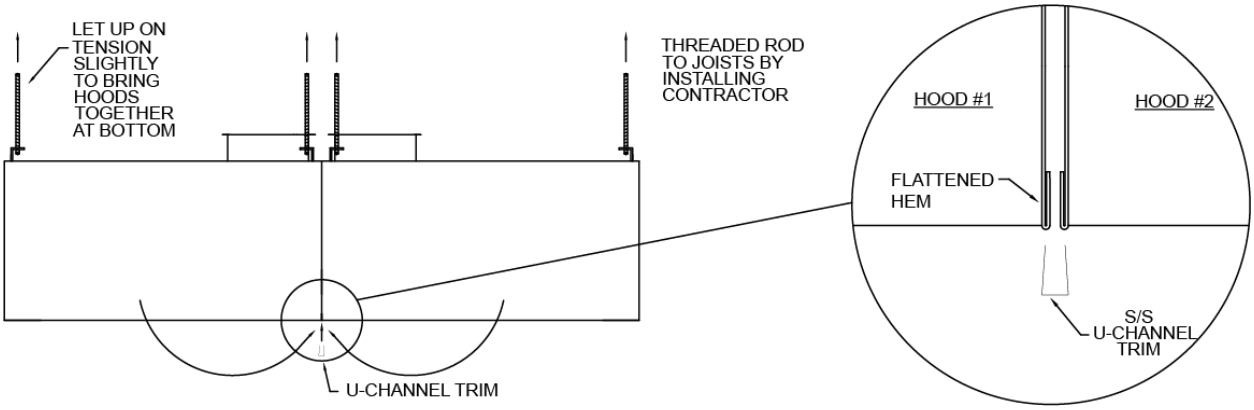

Guidelines for Ductwork Installation

Ductwork is furnished by supplier only if specified by the customer. The following information is provided as a guideline only. Ductwork should be installed in accordance with the local codes and restrictions. It is the responsibility of the installer to check local codes prior to installing the ductwork.

1. All ductwork must be installed in the most direct manner possible.
2. Exhaust duct must be made of 16 gauge carbon steel, 18 gauge stainless steel or must be listed for use with commercial kitchen hoods and follow the manufacturer's listing.
3. Per NFPA 96, all exhaust duct seams and joints must have a continuous liquid tight external weld; exception would be Listed Factory Built Grease Duct.
4. Exhaust risers on the hood have been sized to achieve a velocity of 500-2200 FPM, per NFPA 96, based upon the CFM required for the hood. Maintain the area of each riser when connecting duct offsets or transitions.
5. Branches should enter at gradual expansions and at a preferred angle of 30 degrees or 45 degrees if necessary.
6. When a "pantleg duct" is required to bring two ducts into one exhaust fan, observe the following in order to obtain desired performance:
    a. Use ONLY radius back and radius throat elbows. 2 to 2.5 diameter center line radius is recommended.
    b. Maintain the distance between the center lines of exhaust ducts at a maximum of 12' apart.
    c. The main duct going to the exhaust fan must be the sum of the area of the separate legs.
7. Supply air risers are sized around a maximum of 400 FPM. Maintain this area when installing ducts.
8. Using "flexible" type duct for the supply duct is not recommended, but allowable if less than 6' transitions per SMACNA guidelines.
9. Install rigid type duct in accordance with SMACNA Low Pressure requirements will be acceptable.
10. Access Doors should be provided at the sides or at the top of the duct, as well as changes of direction. Please refer to your AHJ if questions on requirements for horizontal and vertical duct run.
11. **IMPORTANT:** When a fusible link is installed in the make-up air damper at the hood collar, an access door must be cut into the supply duct by the installer.
12. Duct sensor may ship loose on hoods with field cut risers. When double wall duct or ductwork with a diameter smaller than 10" is used, loose duct sensors should be installed in the top of the plenum near the riser in the path of the exhaust airflow.

Installation of Hood Accessories

Back Return Installation

NOTE: Report any damage to the delivering freight carrier and file a claim if appropriate.

1. Locate the assembly and unpack the product from the crate, being very careful not to dent or scratch the outer surface.
2. If the supply risers are to be field cut, cut the risers in as desired. **NOTE: For factory cut supply risers, the manufacturer installs a 2" vertical flange around the opening.** This flange is intended to slip inside a supply boot that is provided by the installer.
3. Locate the wall and ceiling joists which will support the assembly.
4. Use 1/2" threaded rod to hang the back return. Install the threaded rod and angle or Unistrut® that will be used to hang the assembly from the ceiling joists. Drill 9/16" holes as needed in the angle for the threaded rod. Be sure to line up with the welded-on angle mounting brackets on the back return.
5. The back return is typically hung so its top edge is the same height as the top edge of the hood. See **Figure 9**. Refer to Step 2 in the Installation of a Single Hood (Wall or Island) instructions on **page 7** to determine the hood and back return hanging heights.
6. Slowly raise the back return until hanging rods can be attached to the hanging angles. It is advisable to do this before the back return reaches its final height. **NOTE: Please use caution as weight is not proportionally dispersed.** Install the threaded rod into the back return hanging angles and use heavy duty nuts to secure the connection.
7. Make sure the back return is level. Secure to wall in a manner acceptable to the AHJ.
8. If there are multiple back return sections, install the remaining sections now. Use caulk and the T-strip trim between adjacent back return sections. Refer to **Figure 10**.
9. Peel the protective plastic coating on the back return down below where the bottom edge of the hood will rest against it, so it does not remain behind the hood.
10. Caulk the seams between the wall and the back return assembly after the hood and all other accessories have been installed.

Section View of Typical Hood with Back Return

Figure 9 – Typical Hood with Back Return

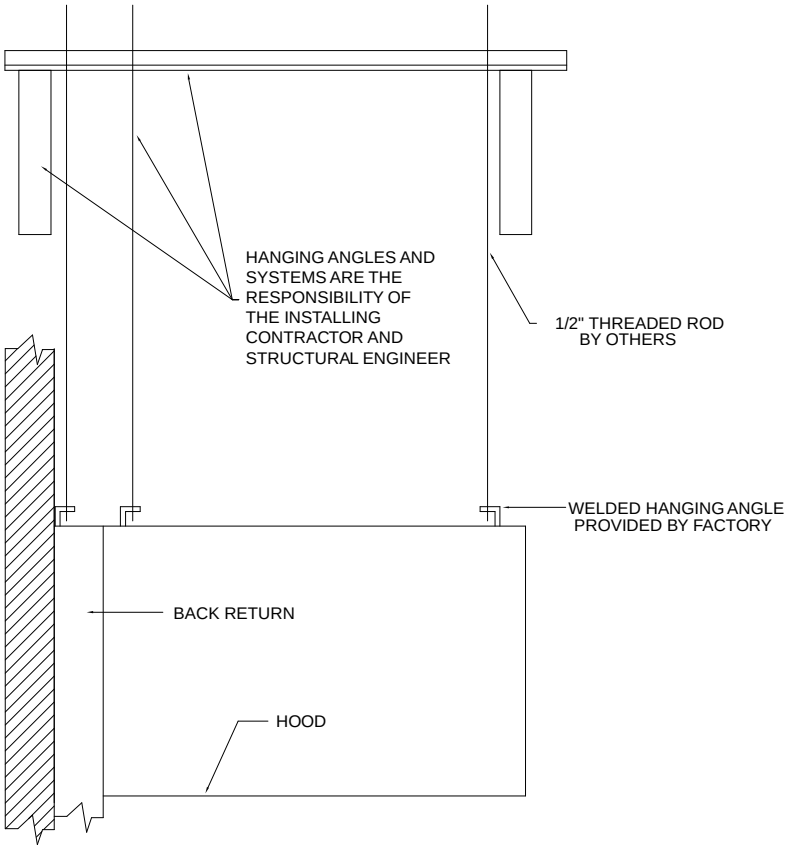

Figure 10 - Back Return – Multiple Sections

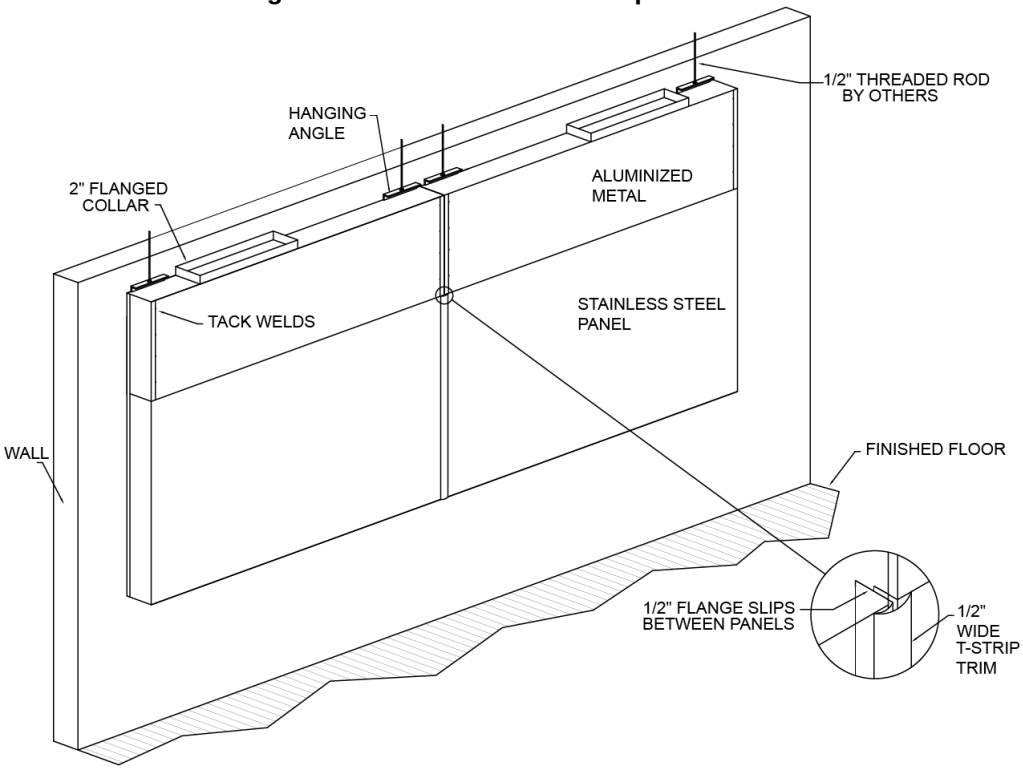

Bolt-Together Standoff Installation

NOTE: Report any damage to the delivering freight carrier and file a claim if appropriate.

1. Unpack the standoff panels from the shipping container, being very careful not to dent or scratch the panels.
2. Mount the end caps for the back standoff to the hood securely with self-tapping sheet metal screws. Clamp the back standoff and the hood together before screwing so they do not shift. Refer to **Figure 11**.
3. Place the back standoff filler piece into place flush with the rear bottom edge of the hood and secure with self-tapping sheet metal screws.
4. Continue with hood installation instructions.
5. After the hood installation is complete, secure the bolt-together standoff to the wall or other hoods as applicable in a manner acceptable to the authority having jurisdiction.

Figure 11 - Bolt Together Standoff Installation

Mount the end caps for the back standoff to the hood using self-tapping sheet metal screws provided. Screw through the end cap flanges into the flanges on the hood.

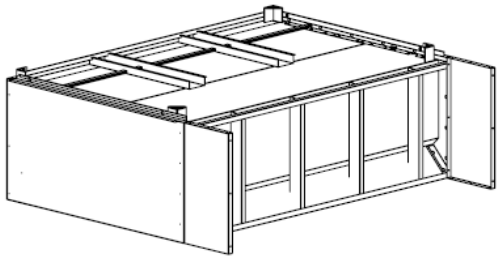

Place the back standoff horizontal filler piece into place. Mount the filler piece using self-tapping sheet metal screws provided. Screw through the filler piece flanges into the studs on the back side of the hood. Do not penetrate into the capture area. Once complete, no screws should be visible from the outside of the hood.

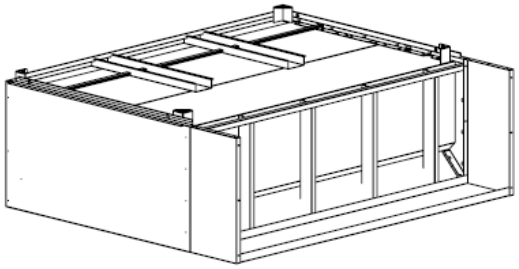

Attach the back standoffs to the wall using screws appropriate for the wall. Screw through the flanges of the standoff into the wall. If standoff mounts against another hood, use the procedure from steps 1 and 2 for the second hood.

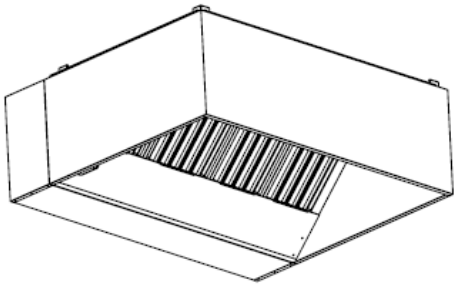

Single PSP/AC-PSP Installation

NOTE: Report any damage to the delivering freight carrier and file a claim if appropriate.

1. Locate the assembly and unpack it from the crate, being very careful not to dent or scratch the outer surface. If the supply risers are to be field cut, cut the risers in as desired.
2. Locate the ceiling joists which will support the assembly. If using Unistrut®, then securely attach to the ceiling joist.
3. Use 1/2" threaded rod to hang the PSP/AC-PSP. Install the threaded rod and angle that will be used to hang the assembly from the ceiling joists. Drill 9/16" holes as needed in the angle for the threaded rod. Be sure to line up with the welded-on angle mounting brackets on the PSP/AC-PSP.
4. Peel the protective plastic coating on the hood down below where the bottom edge of the PSP/AC-PSP will rest against the hood.
5. Move the PSP/AC-PSP into position as indicated by the project submittal drawings; lining up the top edge of the PSP/AC-PSP with the top edge of the hood. Remove the protective plastic coating from the back of the PSP/AC-PSP. Refer to **Figure 12**.
6. Install the threaded rod into the PSP/AC-PSP hanging angles and use heavy-duty nuts to secure the connection. Adjust tension on hanging rods to position PSP/AC-PSP so it fits flush with the hood. **NOTE: Do not apply too much tension; otherwise, a gap between the PSP/AC-PSP and Hood will be created at the bottom.**
7. Where applicable, use sheet metal screws provided from the factory to secure the PSP/AC-PSP attaching bracket to hood. Use at least 5 sheet metal screws for full size attachment brackets. Use at least 3 sheet metal screws for 1/2 sized attachment brackets. **NOTE: Depending on PSP/AC-PSP length and damper placement, there may be 3 or 4 attachment brackets. Hoods and PSPs/AC-PSPs that are 12 feet or greater in length require additional hanging brackets located near the center of the PSP/AC-PSP.**
8. Caulk the seams between the hood(s) and the PSP/AC-PSP assembly, as well as between adjacent PSP/AC-PSP assemblies (if applicable) after the hood(s) and hood accessories have been installed.

Figure 12 – Single PSP/AC-PSP Installation

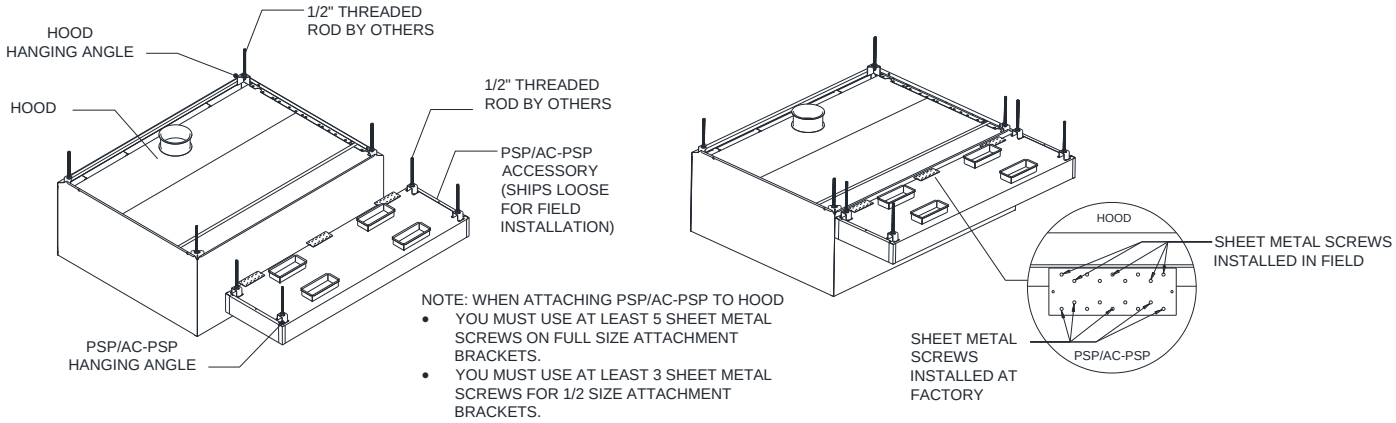

CAUTION: ALL HOOD AND PSP/AC-PSP HANGING ANGLE BRACKETS MUST BE USED DURING INSTALLATION. VERIFY ALL CONNECTIONS ARE SECURED TO CEILING JOISTS OR UNISTRUT. IMPROPER INSTALLATION MAY LEAD TO INJURY AND/OR DEATH.

Multiple PSP/AC-PSP Installation

NOTE: Report any damage to the delivering freight carrier and file a claim if appropriate.

1. Locate the assembly and unpack it from the crate. Be very careful not to dent or scratch the outer surface.
2. Upon completion of the hood install, install the back PSP/AC-PSP first. Then if applicable, install the side PSP/AC-PSP.
3. If the supply risers are to be field cut, cut the risers in as desired.
4. Locate the ceiling joists which will support the assembly. If using Unistrut®, securely attach to the ceiling joist.
5. Use 1/2" threaded rod to hang the PSP/AC-PSP. Install the threaded rod and angle that will be used to hang the assembly from the ceiling joists. Drill 9/16" holes in the angle if not using Unistrut®. Make sure to line up with the angle mounting brackets on the PSP/AC-PSP.
6. Peel the protective plastic coating on the hood down below where the bottom edge of the PSP/AC-PSP will rest against the hood.
7. Move the PSP/AC-PSP into position as indicated by the project submittal drawings. If flush mounted, lineup the top edge of the PSP/AC-PSP with the top edge of the hood. Remove the protective coating from the back of the PSP/AC-PSP. Refer to **Figure 13** for PSP/AC-PSP installation reference.
8. Install the threaded rod into the PSP/AC-PSP hanging angles and use heavy duty nuts to secure the connection. Adjust tension on hanging rods to position PSP/AC-PSP so it fits flush with the hood. **NOTE: Do not apply too much tension, otherwise, a gap between the PSP/AC-PSP and Hood will be created at the bottom.**
9. Install additional PSPs/AC-PSPs, if applicable, in the same manner.
10. Where applicable, use sheet metal screws provided from the factory to secure the PSP/AC-PSP attaching bracket to other assemblies/hood, see to **page 21**. Use at least 5 sheet metal screws for full size attachment brackets. Use at least 3 sheet metal screws for 1/2 sized attachment brackets. Refer to **Figure 15**. **NOTE: Depending on PSP/AC-PSP length and damper placement, there may be 3 or 4 attachment brackets. Hoods and PSPs/AC-PSPs that are 12 feet or greater in length require additional hanging brackets located near the center of the PSP/AC-PSP.**
11. Caulk the seams between the hood(s) and each PSP/AC-PSP, as well as between adjacent PSPs/AC-PSPs (if applicable) after the hood(s) and hood accessories have been installed. An isometric view of the hood assembly is shown in **Figure 15**.

Figure 13 – Multiple PSP/AC-PSP Installation

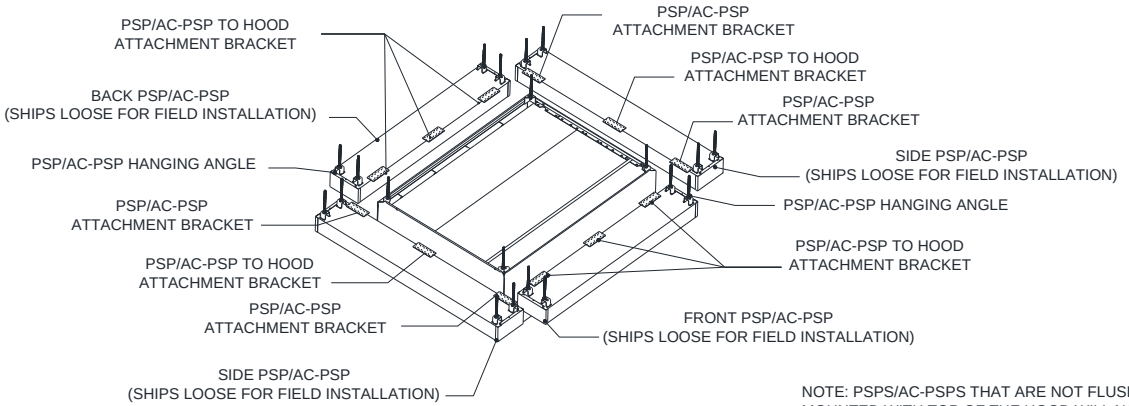

CAUTION: ALL HOOD AND PSP/AC-PSP HANGING ANGLE BRACKETS MUST BE USED DURING INSTALLATION. VERIFY ALL CONNECTIONS ARE SECURED TO CEILING JOISTS OR UNISTRUT. IMPROPER INSTALLATION MAY LEAD TO INJURY AND/OR DEATH.

Figure 14 - Attachment of Side PSP/AC-PSP Bracket

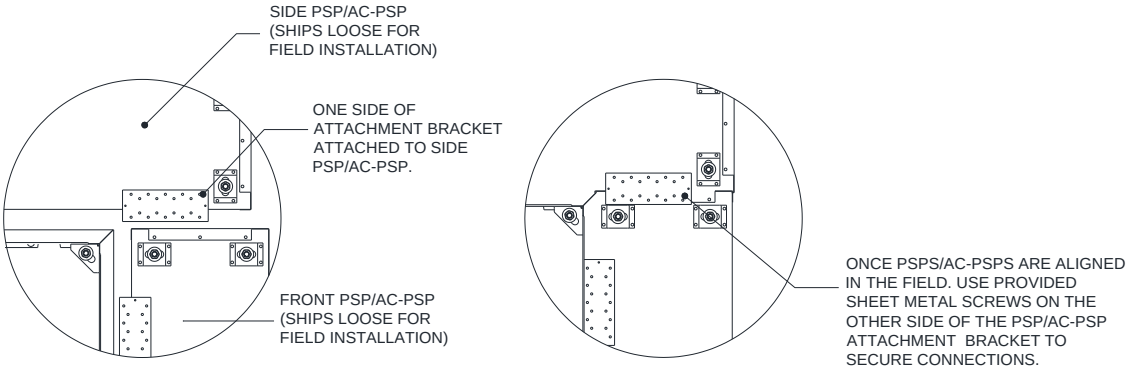

Figure 15 – Attachment of PSP/AC-PSP to Hood

NOTE: PSPS/AC-PSPS THAT ARE NOT FLUSH MOUNTED WITH HOOD WILL NOT USE PSP/AC-PSP TO HOOD ATTACHMENT BRACKET.

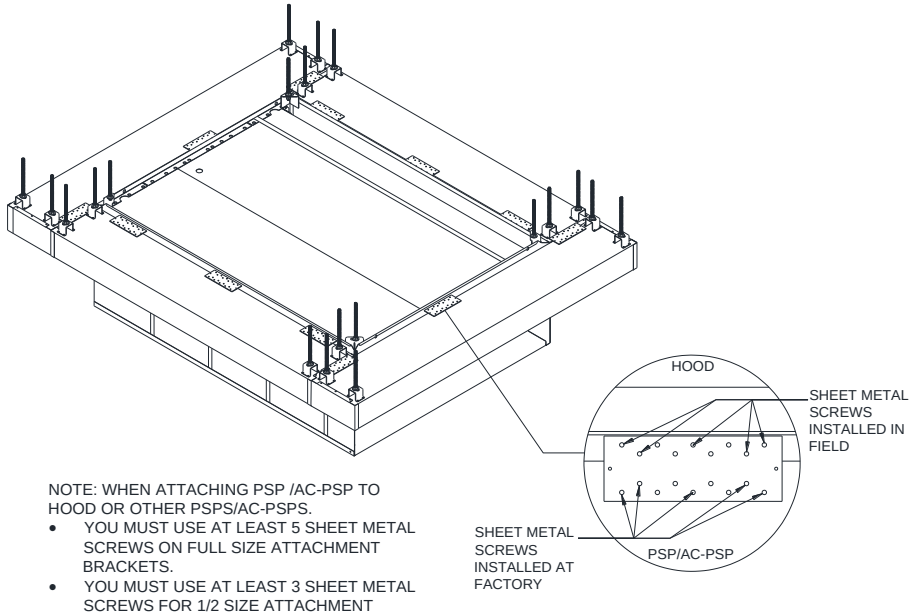

NOTE: WHEN ATTACHING PSP /AC-PSP TO HOOD OR OTHER PSPS/AC-PSPS.

- YOU MUST USE AT LEAST 5 SHEET METAL SCREWS ON FULL SIZE ATTACHMENT BRACKETS.
- YOU MUST USE AT LEAST 3 SHEET METAL SCREWS FOR 1/2 SIZE ATTACHMENT BRACKETS.

CAUTION: ALL HOOD AND PSP/AC-PSP HANGING ANGLE BRACKETS MUST BE USED DURING INSTALLATION. VERIFY ALL CONNECTIONS ARE SECURED TO CEILING JOISTS OR UNISTRUT. IMPROPER INSTALLATION MAY LEAD TO INJURY AND/OR DEATH.

Wrapper (Enclosure Panel) Installation

NOTE: Report any damage to the delivering freight carrier and file a claim if appropriate.

1. Unpack the wrapper panels from the shipping container, being very careful not to dent or scratch the panels.
2. Locate one of the side wrapper panels and position it on the hood so that the 1/2” flange on the bottom of the panel slips underneath the side channel on top of the hood. Refer to **Figure 16**.

   NOTE: A notch will have to be cut on the wrapper flange using shears (tin snips) where interference occurs, where applicable. Refer to **Figure 17**.
3. Press fit panel into place until wrapper face is flush with hood face. Screw or pop-rivet wrapper to the side channel and wall. Refer to **Figure 18**.
4. Locate front wrapper panel. Position its lower 1/2” flange under front channel on hood and slide panel into position, so that the end of front panel is behind the 90 degree bend of the side panel. Refer to **Figure 19**. Once in place, press fit the lower flange of the front panel into the front channel in order to have wrapper face flush with the front of the hood. Screw or pop-rivet bottom of front panel to the front channel.
5. Drill appropriate holes and rivet front to side wrapper panel. Refer to **Figure 19**.
6. If multiple panels are used, a stainless trim piece will be provided to attach multiple panels together (i.e. hood is side to side, hood is back to back to another, or the wrapper length exceeds 16 feet). Attach the panels by slipping them behind the stainless trim and fastening with screws or rivets, see **Figure 21.**

   NOTE: Trim will have to be cut to fit. In most instances, trim should extend from bottom of hood to top of wrapper panel.
7. Locate the other side panel. Repeat steps 2 and 3. Attach to front wrapper panel as instructed in step 4.

   NOTE: In most instances where hood is located against a side wall, fasten the front wrapper panel to the wall. Refer to Figure 20.
8. Caulk all gaps and seams after the hood(s) and hood accessories have been installed.

Figure 16 – Wrapper Detail

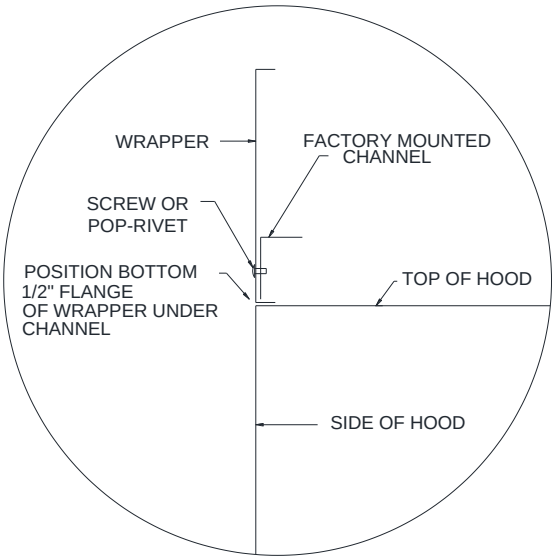

Figure 17 - Top Hood Seam Detail (Not on all models)

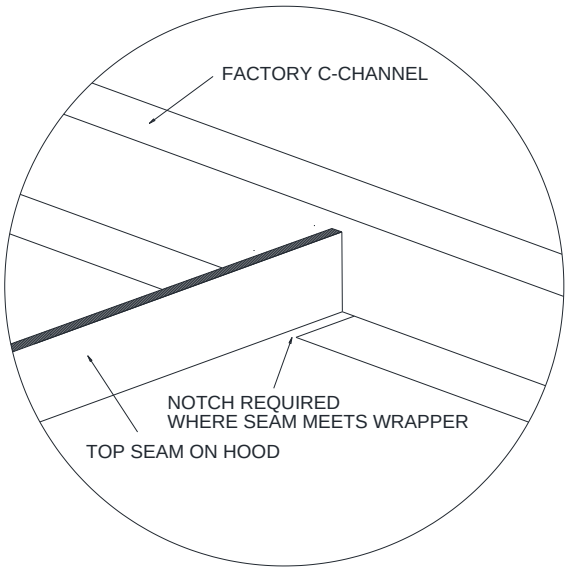

Figure 18 - Rear Wall Attachment

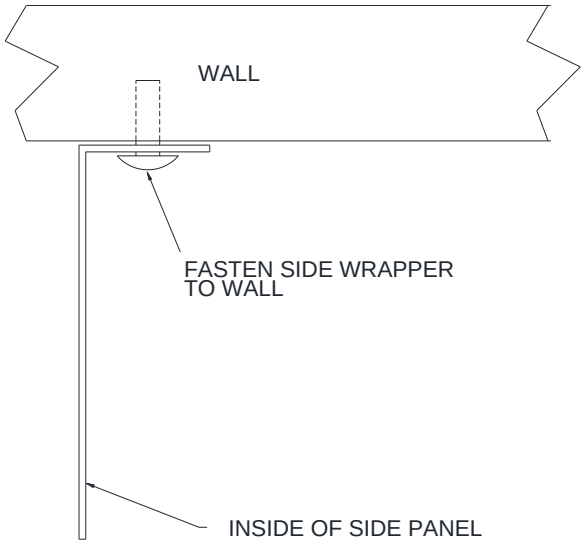

Figure 19 - Front Corner Assembly

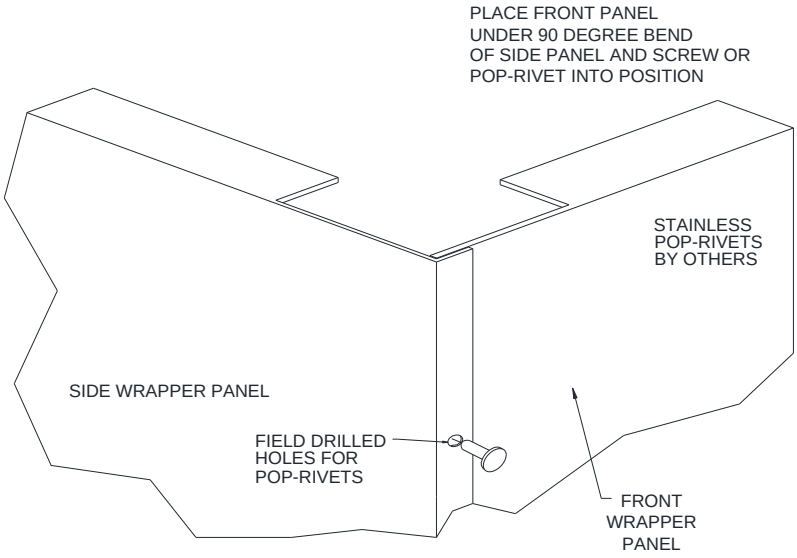

Figure 20 - Side Wall Attachment

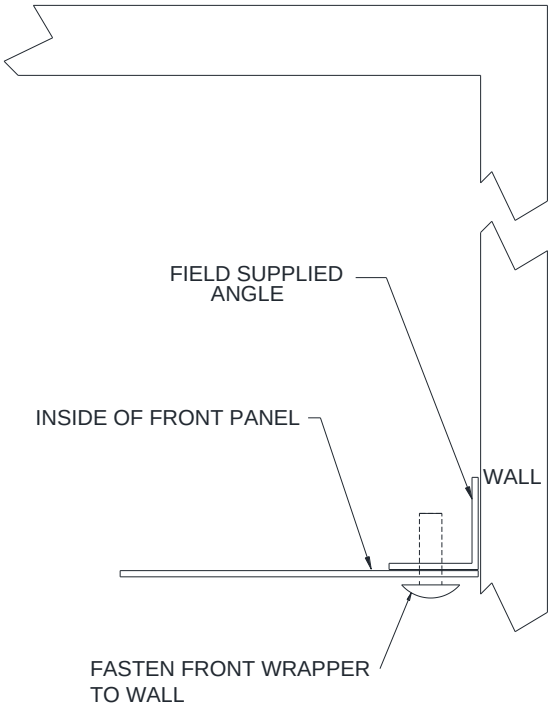

Figure 21 - Completed Wrapper Assembly

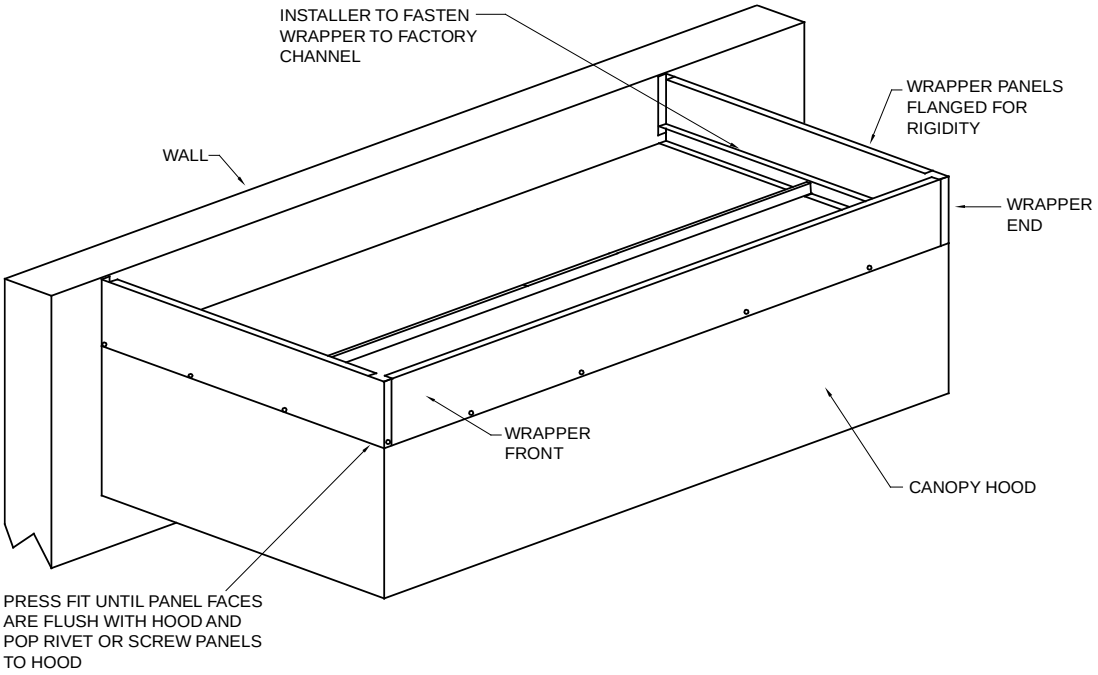

Figure 22 – Completed Wrapper Assembly on End-to-End Hoods

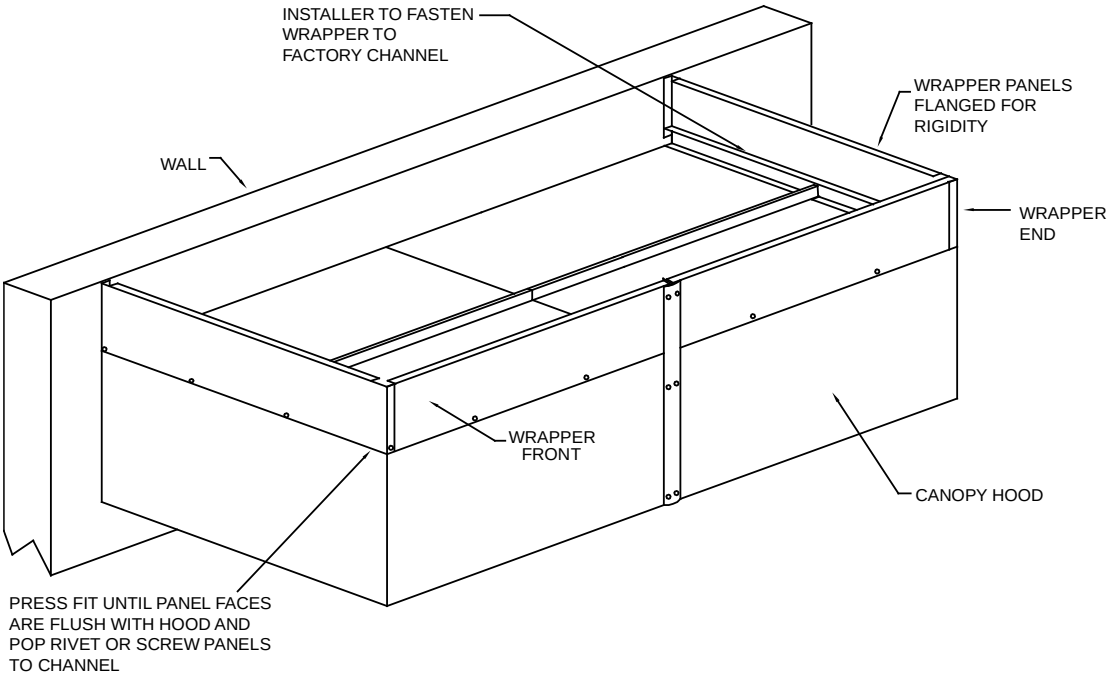

End Panel Installation

NOTE: Report any damage to the delivering freight carrier and file a claim if appropriate.

1. Unpack the end-panel(s) from the shipping container, being very careful not to dent or scratch the panels. Refer to the project submittal drawings to determine mounting location.
2. Position the end panel with the kinked top located flush against the inside of the hood end and the rear flange located flush against the rear wall and facing toward the interior of the hood. Refer to **Figure 23** and **Figure 24**.
3. Attach the top edge of the end-panel to the end of the hood using the acorn nuts provided. Hand tighten each acorn nut, then use a wrench to add an additional 1/4 turn – **do not over tighten**.
4. Secure the rear flange to the wall using stainless steel sheet metal screws, being sure to keep the end panel straight vertically.
5. Caulk all seams between the end-panel and the hood after the hood(s) and hood accessories have been installed.

Figure 23 - End Panel Installation (Hoods with Hems on Ends)

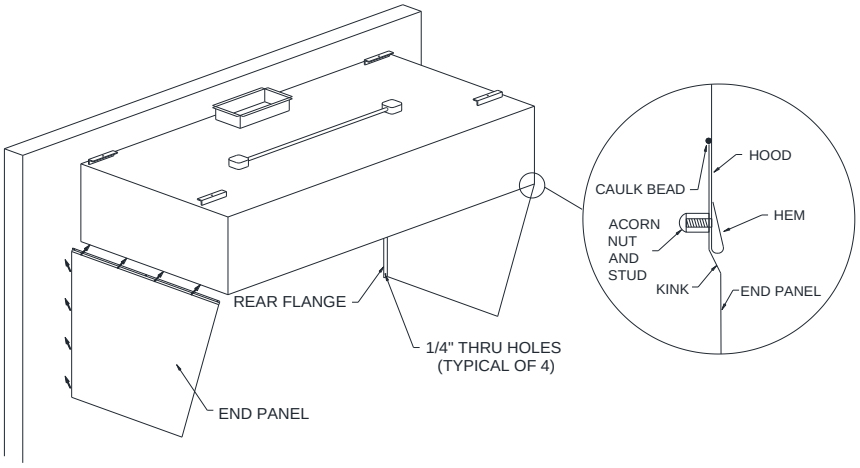

Figure 24 - End Panel Installation (Hoods with Flanges on Ends)

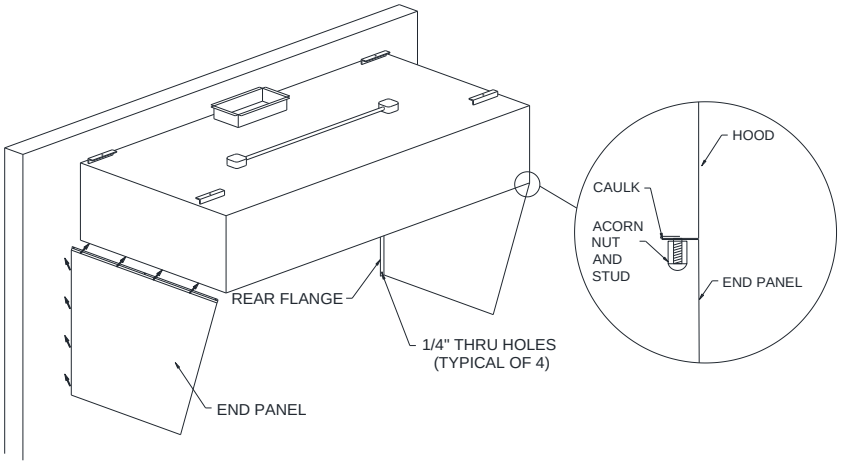

Hood End panels or walls may be field installed or shipped loose from the factory. End panels allow the clearance from the cooking appliance to the end of the hood to be reduced to 0 inches

Quarter End Panel Installation

1. Refer to **Figure 25** and **Figure 26.**
2. Follow steps 1 through 5 of the End Panel Installation instructions on **page 26**.

Figure 25 - Quarter End Panel Installation (Hoods with Hems on Ends)

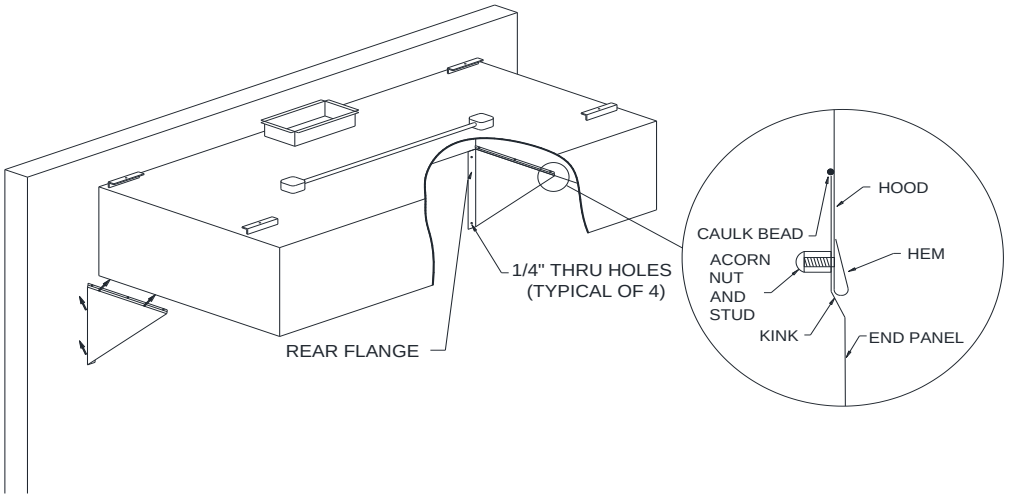

Figure 26 - Quarter End Panel Installation (Hoods with Flanges on Ends)

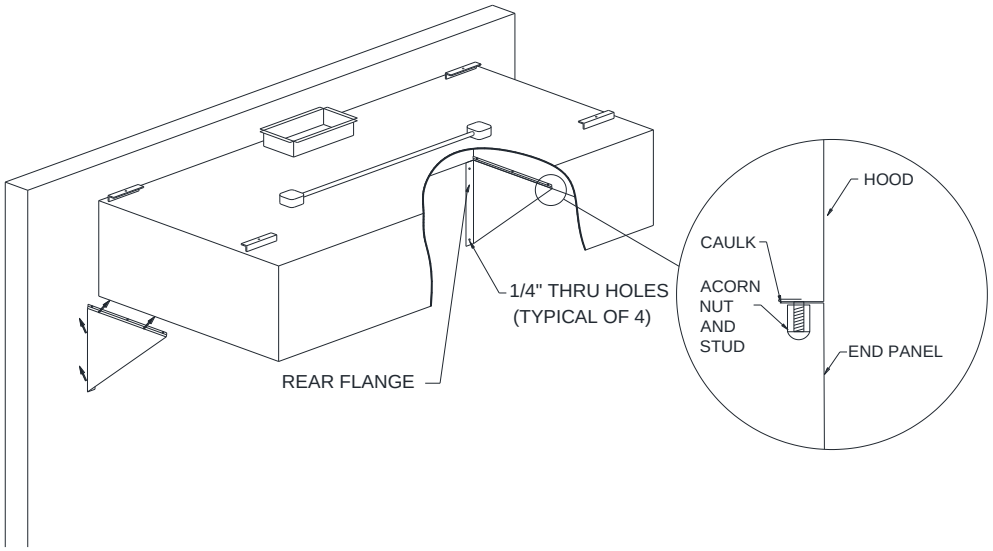

Hood End panels or walls may be field installed or shipped loose from the factory. End panels allow the clearance from the cooking appliance to the end of the hood to be reduced to 0 inches

Insulated End Panel Installation

1. Refer to **Figure 27** and **Figure 28.**
2. Follow steps 1 through 5 of the End Panel Installation instructions on **page 26**.

Figure 27 - Insulated End Panel Installation (Hoods with Hems on Ends)

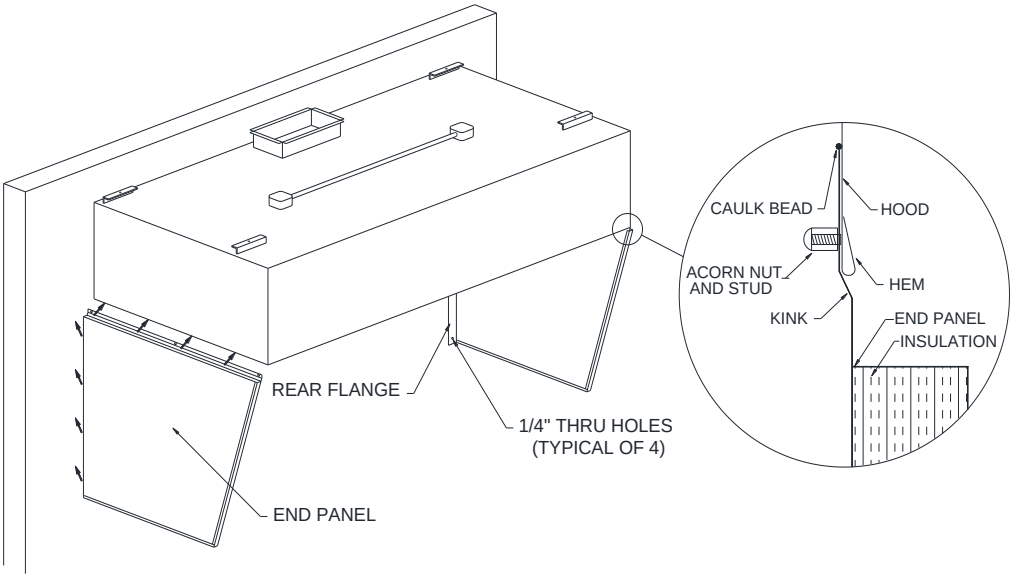

Figure 28 - Insulated End Panel Installation (Hoods with Flanges on Ends)

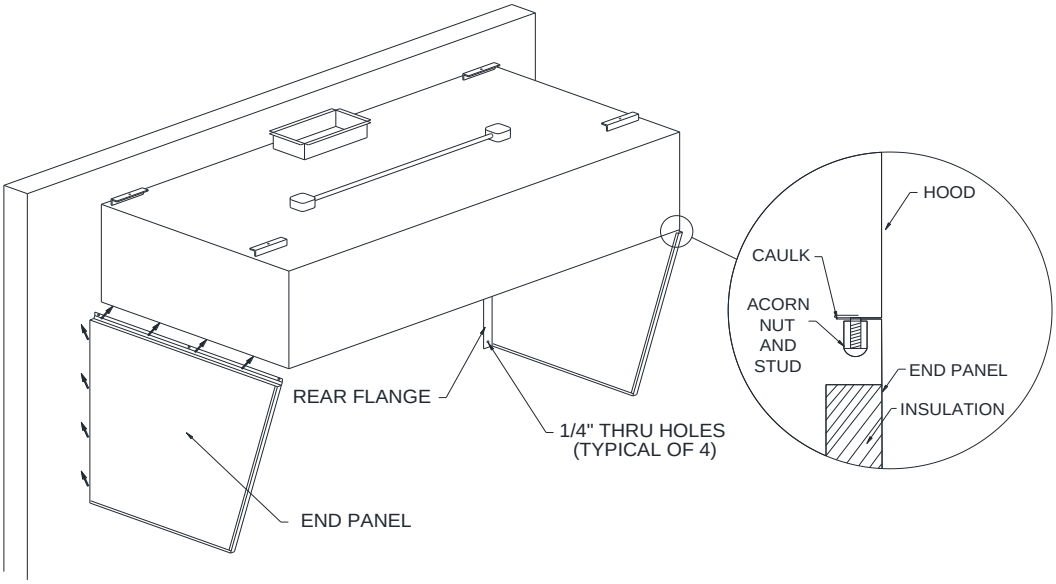

Hood End panels or walls may be field installed or shipped loose from the factory. End panels allow the clearance from the cooking appliance to the end of the hood to be reduced to 0 inches

Vertical End Panel Installation

1. Unpack the end panel(s) from the shipping container, being very careful not to dent or scratch the panels. Refer to the project submittal drawings to determine mounting location.
2. Position the end panel with the top located flush against the bottom of the hood end and the rear flange located flush against the rear wall and facing toward the interior of the hood. Studs on bottom of hood ends should align with slots on top of vertical end panel. Refer to **Figure 29**.
3. Adjust legs to create slight tension between the vertical end panel and bottom of hood. Confirm that the top side of the vertical end panel is flush with the bottom of the hood.

   NOTE: Legs have anchoring points in the feet which are optional to secure to the floor.
4. Secure the rear flange to the wall using stainless steel sheet metal screws, being sure to keep the end panel straight vertically.
5. Caulk all seams between the vertical end panel and the hood after the hood(s) and hood accessories have been installed.

Figure 29 – Vertical End Hoods with Flanges on Ends

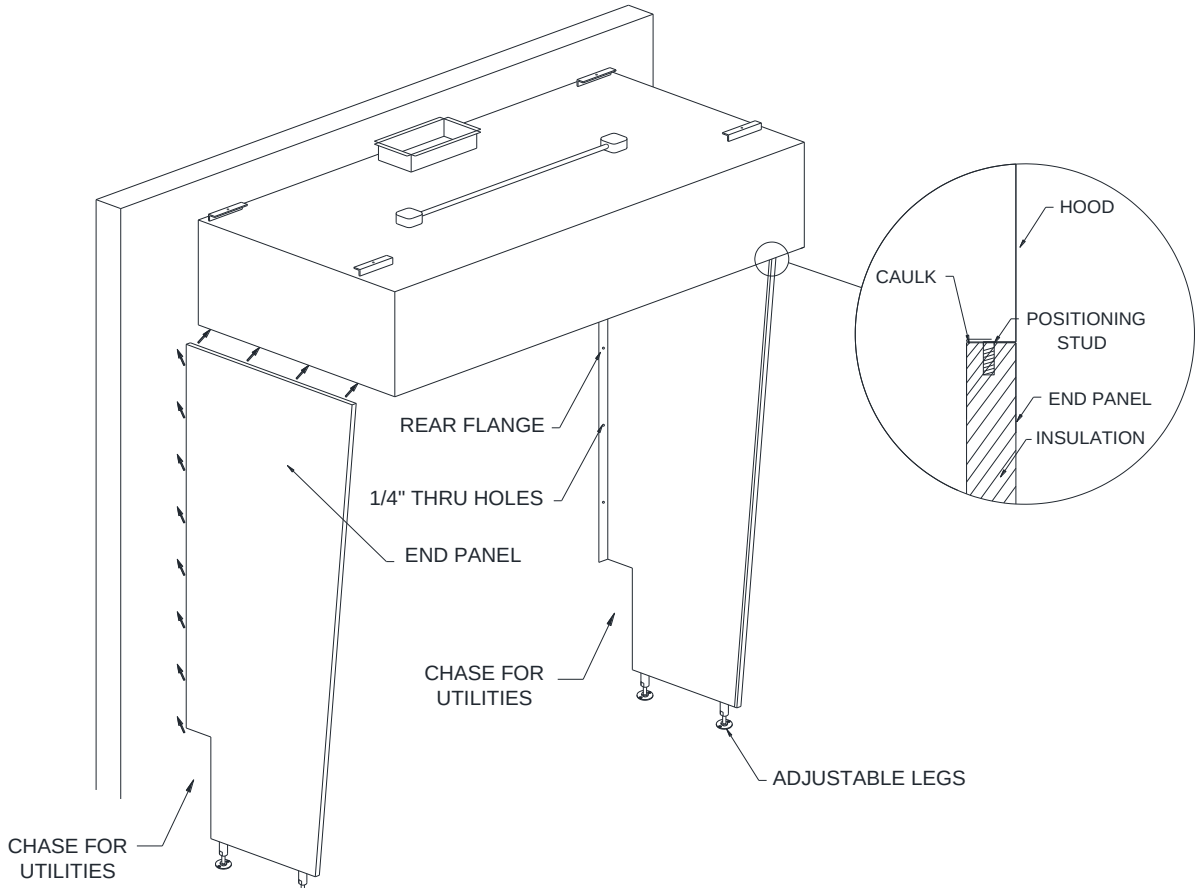

Hood End panels or walls may be field installed or shipped loose from the factory. End panels allow the clearance from the cooking appliance to the end of the hood to be reduced to 0 inches

Backsplash Installation

NOTE: Report any damage to the delivering freight carrier and file a claim if appropriate.

1. Unpack the backsplash panels from the shipping container being very careful not to dent or scratch the outer surface.
2. Refer to the project submittal drawings to determine mounting orientation (vertical or horizontal) and mounting location. If backsplash panels intended for the same wall are of different widths, position them in a symmetrical arrangement.
3. Determine whether or not cutouts are required to accommodate electrical outlets, pipes, etc. Make appropriate cutouts being careful not to crease the backsplash panels.
4. Make sure walls are clean and free of debris.
5. Apply Titebond® Advanced Polymer Panel Adhesive or equivalent recommended for stainless steel to backsplash panels and trim pieces. Do not allow the adhesive to dry. Use a trowel to spread adhesive in a smooth even manner to the edges and corners. **Do not allow clumping or bumps on the backside of the panel.**
6. Install the backsplash panels to the wall. When hanging multiple panels, install one at a time. Install trim pieces to the wall. Refer to **Figure 30**.
7. Once the panels are installed, immediately use a laminate roller to smooth the panel and adhesive out. **Do not press on the panel with hands or other foreign objects at all.**
8. Verify all backsplash panels are installed and have properly set before placing appliances or other objects in front of the panels.

NOTE: Follow adhesive manufacturer's recommendations on setting and dry time.

Figure 30 – Stainless Steel Backsplash

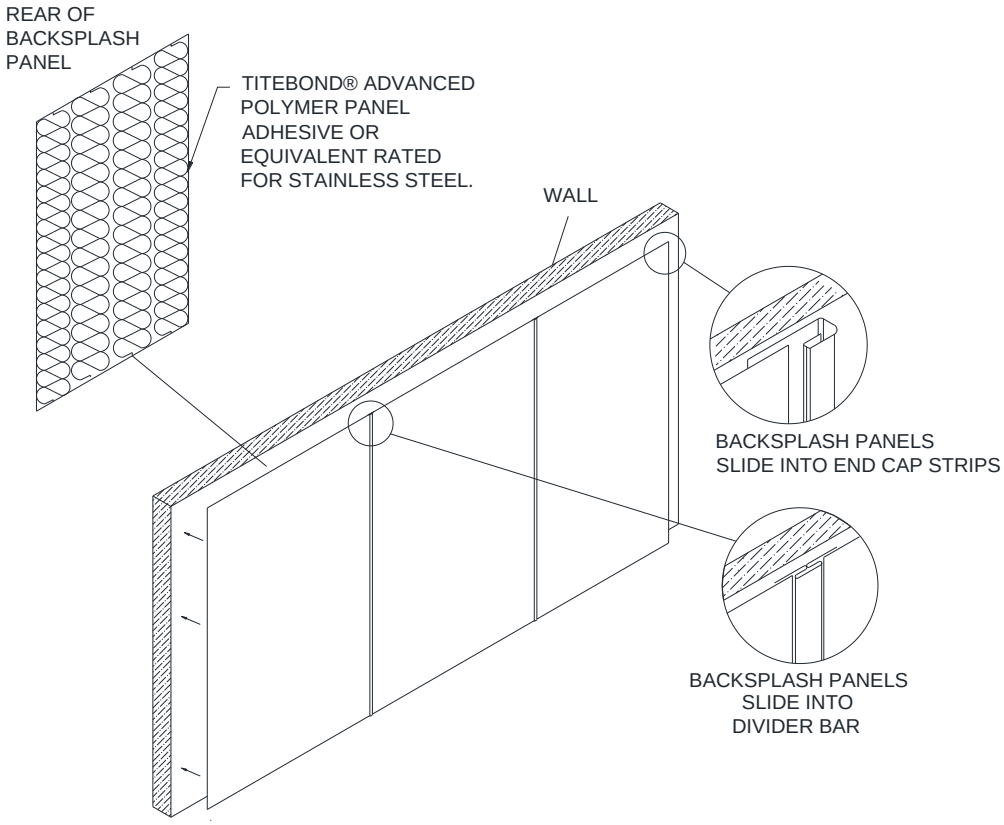

Insulated Backsplash Installation

1. Follow steps 1 through 3 of the Backsplash Installation instructions on **page 30**.
2. Slide the top flange behind the lower rear edge of the hood. Secure the bottom flange to the wall using stainless steel sheet metal screws. Refer to **Figure 29**.
3. If there are multiple insulated backsplash sections, install the others now.
4. Caulk the seams between the wall and the insulated backsplash panel after the hood(s) and hood accessories have been installed.

Figure 31 - Insulated Backsplash

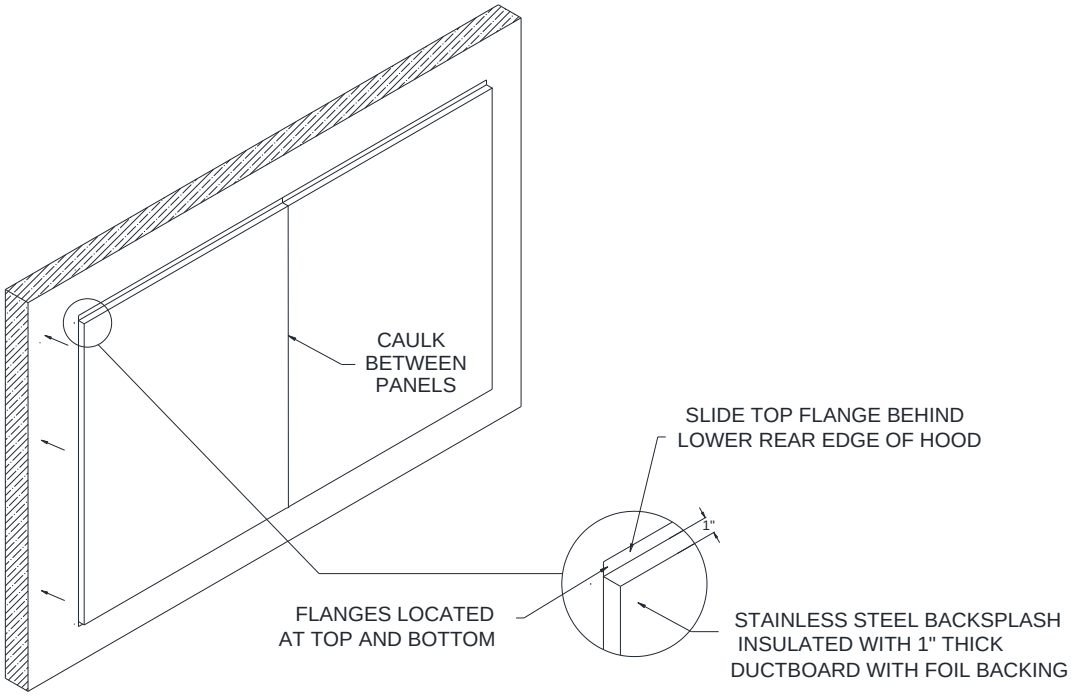

Pizza Oven Top Mount Flange Installation

1. Thoroughly inspect hood for damage including Pizza Oven Top Mount Flanges.
2. Carefully unpack hood, remove shipping screws from rear flange before moving hood.
3. Use supplied 3M 2000+ fire barrier sealant to apply a double bead to the underside of the flanges.
4. Centrally position the hood on top of the oven over the opening. The front edge of the side flanges should be flush with the front face of the oven.
5. Use supplied self-drilling screws to fasten hood to oven. Every mounting holes needs to be used.

Figure 32 – Pizza Oven Top Mount

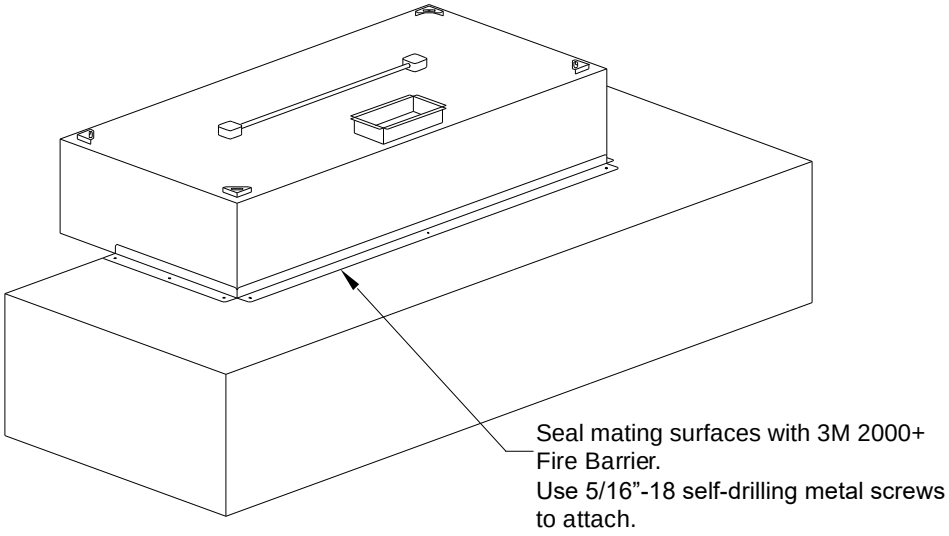

Plate Shelf Option Installation

Plate Shelf Hood comes with wrappers that have to be field installed. For field installation of wrappers, refer to **page 22**.

Figure 33 – Plate Shelf Option Installation

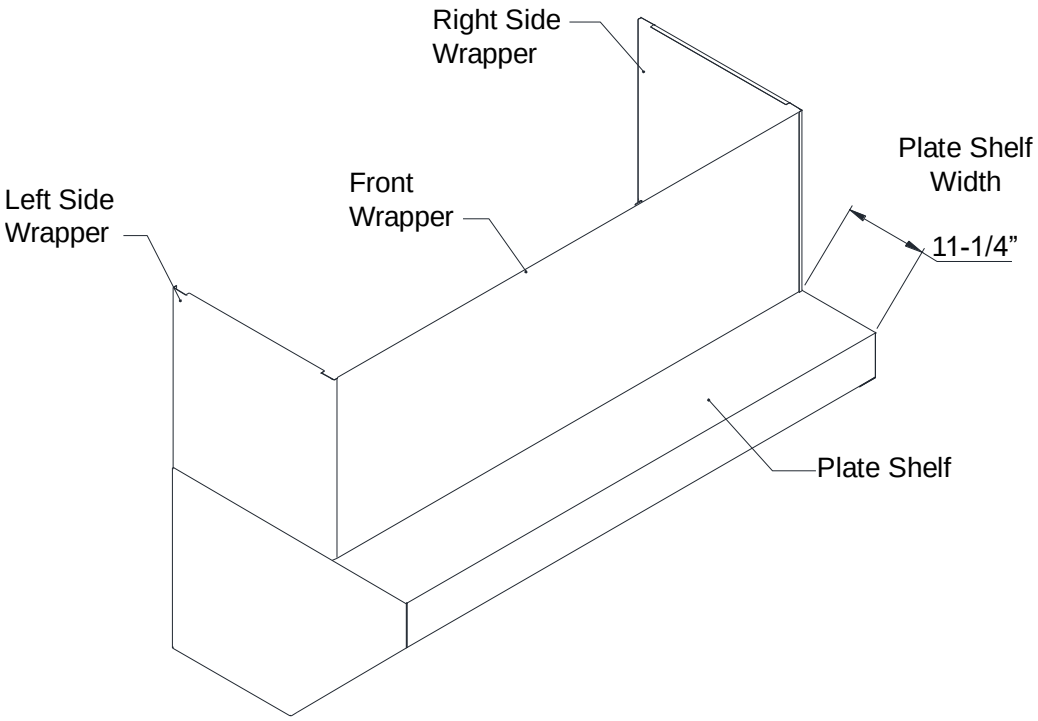

Continuous Capture

1. The hood is shipped with a U-trim to cap the raw edges of the continuous capture cutout(s). Remove U-trim from packaging.
2. Measure and cut U-trim to length for all four edges of the continuous capture cutout(s).
3. Dry fit cut pieces of U-trim to verify a proper finished fit.
4. Remove fitted U-trim pieces and apply silver silicone caulking to raw edges of the continuous capture cutout(s).
5. Reinstall fitted U-trim pieces to seal the raw edges of the continuous capture cutout(s).
6. Wipe off any excess caulking with a cotton cloth and rubbing alcohol.

Figure 34 – Continuous Capture

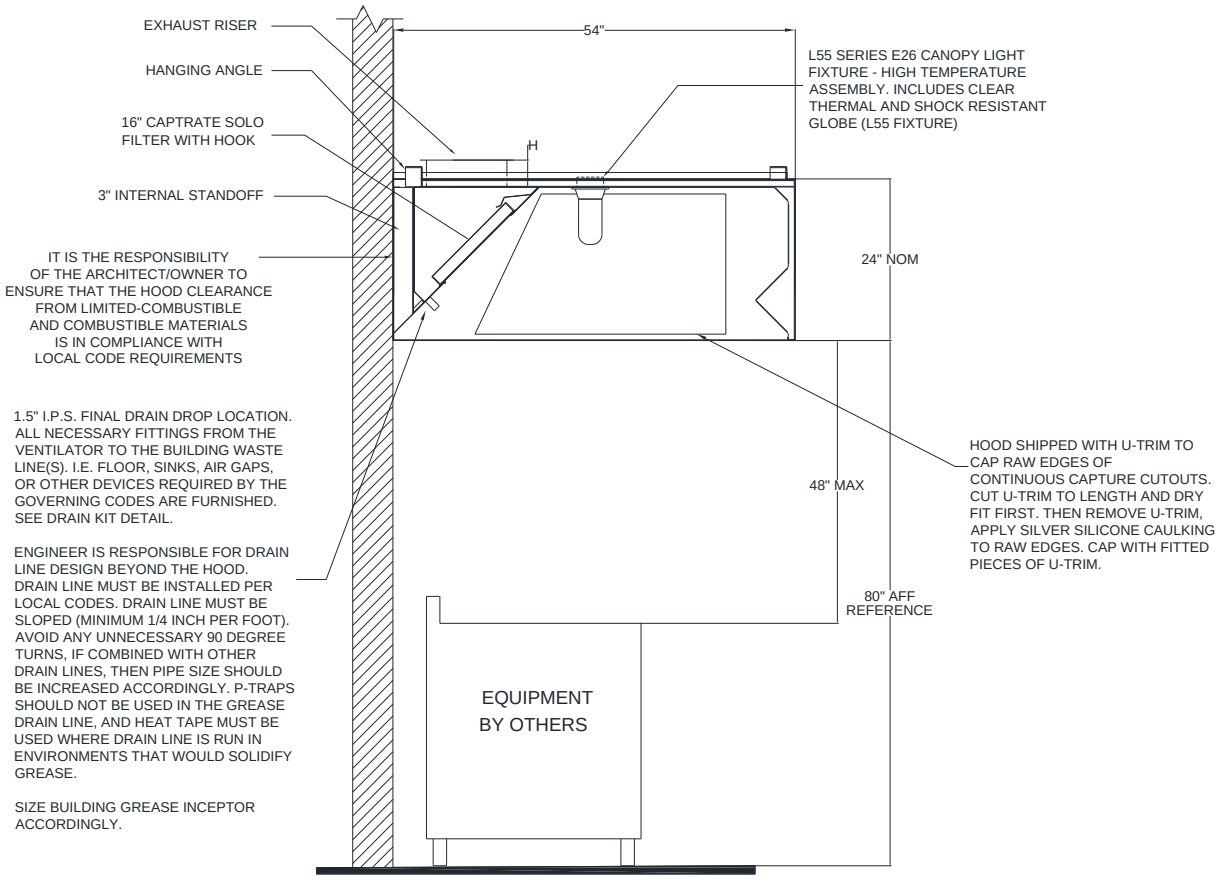

Utility Cabinet

Wall Mount No Hanging Angles

Figure 35 - Wall Mount Option

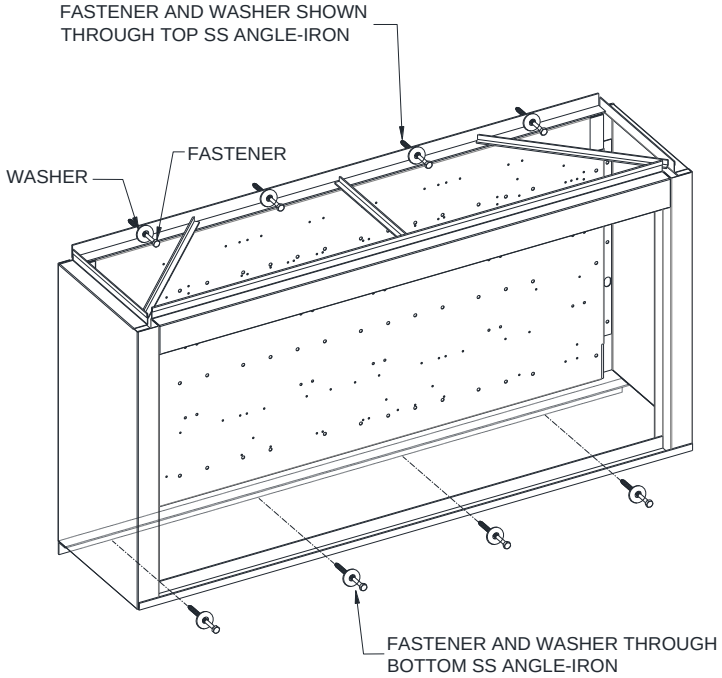

<u>NOTE:</u> WALL-MOUNTED UTILITY CABINETS UP TO 48" LONG, MUST HIT TWO (2) STUDS MINIMUM, FASTENED TOP AND BOTTOM OF THE WALL-MOUNT UTILITY CABINET.

<u>NOTE:</u> WALL-MOUNTED UTILITY CABINETS OVER 48" LONG, MUST HIT THREE (3) STUDS MINIMUM, FASTENED TOP AND BOTTOM OF THE WALL-MOUNT UTILITY CABINET.

Utility cabinet must be secured to the wall with a minimum of eight (8) fasteners and washers.

Top and bottom of cabinet both require four (4) fasteners with washers.
Mark locations on top angle iron and bottom angle iron.
Drill pilot holes for fasteners.

A. When installing into concrete/masonry wall, use 5/16" x 3-1/2” tapcons.
B. When installing into metal studs, use 5/16" x 1-1/2” self-drilling screws.
C. When installing into wooden studs, use 5/16" x 2-1/4” lag bolts.
D. When fastener lands only on drywall, use 5/16" x 4" long toggle bolts.

Wall Mount with Hanging Angles

For wall mount utility cabinets with hanging angles, refer to **Hanging Angle Assembly Instructions** on **page 10**.

OPERATION

Commercial kitchen ventilation hoods are intended to be used in conjunction with ductwork and fans, which have been properly sized and properly installed in accordance with manufacturer's specifications and local code requirements.

Before turning on cooking equipment, make sure that the make-up air and exhaust fans are on. Leave fans on for at least 30 minutes after cooking equipment is shut off.

Clean hood as needed to comply with local code requirements and as directed in the Maintenance section of this manual.

Performance Evaluation

A performance evaluation of the system can be performed only after all of the following items have been verified:

1. All fans are operational and rotations visually verified by observation of the arrows stamped on them.
2. All filters are in place.
3. Equipment under the hood is in place and operational.
4. HVAC units are in place and operational with blowers operating correctly.

Guidelines before Beginning

The testing and balancing of a system is necessary to ensure proper and efficient operation of the system as it was designed. In any building where effluent and hot air is removed, the mass of air must be replaced to maintain a constant pressure in the space. Any change in the pressure differential between inside and outside air will in some way affect the operation of a system; most commonly that affect is a negative one.

A test and balance, as well as the simple performance test in International Mechanical Code Section 507.16.1 should be included in all jobs; code inspectors are increasingly enforcing these requirements. Requirements in the 2006 IMC, which is currently effective in most parts of the United States, are as follows:

> "*507.16 Performance test. A performance test shall be conducted upon completion and before final approval of the installation of a ventilation system serving commercial cooking appliances. The test shall verify the rate of exhaust airflow required by Section 507.13, makeup airflow required by Section 508, and proper operation as specified in this chapter. The permit holder shall furnish the necessary test equipment and devices required to perform the tests.*
>
> *507.16.1 Capture and containment test. The permit holder shall verify capture and containment performance of the exhaust system. This field test shall be conducted with all appliances under the hood at operating temperatures, with all sources of outdoor air providing makeup air for the hood operating and with all sources of recirculated air providing conditioning for the space in which the hood is operating. Capture and containment shall be verified visually by observing smoke or steam produced by actual or simulated cooking, such as with smoke candles, smoke puffers, etc."*

The simplest means of doing the performance test is using a T-T smoke puffer. Activate the puffer and use it to trace effluent around the entire perimeter of the hood, emitting smoke every few inches under the lower edges of the hood.

External Factors which may affect Hood Performance

1. HVAC units are generally specified to supply 25% outside air (OA) to the room ventilation. If RTU's are not supplying the proper amount of OA to the building, then negative pressure will exist.
2. HVAC return grilles located close to a hood can cause performance problems. The return grille competes with the hood to capture air in the room. For example, a return grille for a 10-ton HVAC unit can draw anywhere from 3000 to 4000 CFM. This is equivalent to the exhaust of a 10' to 13' canopy hood. As a result, a return air grille located within six feet (6') of the hood can have a serious effect on the capture ability of the hood.

NOTE: High velocity diffusers or HVAC returns should not be placed within 10 feet of the exhaust hood. Perforated diffusers are recommended.

3. HVAC diffusers located near a hood can create flows in the room that detract from the capture ability of the hood. If the HVAC diffuser bounces air off the front of the hood or directs air along the hood and past the end, the air flow created can draw smoke and contaminants out of the hood.

Using a Shortridge Instrument

The Shortridge is a sophisticated instrument that, with its built-in features, is basically a self-contained test and balance kit. It has a "velocity grid" for filter face readings, a "velocity probe" for ductwork readings, a "differential pressure" function to check room pressure and static pressure, as well as a "temperature probe" so it can calculate accurate values based on varying temperature (most equipment assumes standard temperature and pressure), and many other useful features.

Hood Information

To calculate the CFM, the following information must first be acquired:

1. Hood size and length
2. Filter size and length
3. PSP width and length

Measuring Hood Static and Room Pressure

Static Pressure:

Measure hood static pressure at exhaust collar using the Shortridge instrument.

Static Pressure = _____

Room Pressure:

For an exhaust hood to work properly, the kitchen should be at a slight negative pressure to the dining area (caused by its air removal) and the building overall slightly positive. The dining room should be a slight positive to the outdoors and the kitchen +0.02" w.c. or about 300 CFM positive. This will keep dust and bugs outside and doors will be easy to open. The kitchen should be a slight negative to the dining room to keep the odors in the kitchen. The kitchen should be balanced to slightly negative, 0" to -0.02" w.c., to the dining room. Generally, if there is not enough negative, or if there is positive pressure there will be smoke roll out from the hood that occurs due to the wind currents from people moving around in the area, while if there is too much negative, there becomes a pressure problem on the building(opening doors, drafts, hot water heaters, etc.)

Measure room static pressure using the Shortridge instrument. Adjust the supply fan to set room to 0.02" negative to dining area.

Room Pressure = _____

Calculating Make-up Air CFM

With a Shortridge Instrument and Spreadsheet

1. Use the Velgrid mode of the Shortridge instrument to measure supply air velocity. Make sure to take measurements every twelve (12) inches along the length of the PSP.
2. Locate the appropriate Excel spreadsheet for the PSP/Supply velocity and record all necessary data. This spreadsheet will calculate the total supply CFM for the hood.
3. The spreadsheet is located on the manufacturer's website.

Without a Shortridge Instrument

1. Compute the open area of the supply plenum of the hood. This area must be calculated at the same plane that velocity readings are taken. Area can be calculated using the following formula:

   Area (ft^2) = Length (ft) x Width (ft)

   If both the length and width are measured in inches, use the following formula:

   Area (ft^2) = Length (in) x Width (in) / 144

2. Record velocity of air through supply openings from left to right on raw data sheet.
3. Compute and record average velocity through supply openings.
4. Compute and record CFM through supply openings.

   CFM = Free area x Average Velocity

5. Compute total CFM through all supply openings for each hood.

Calculating Exhaust Air CFM

With a Shortridge Instrument and Spreadsheet

1. Use the Velgrid mode of the Shortridge instrument to measure the velocity at each filter.
2. Locate the appropriate Excel spreadsheet for the exhaust velocity and record all necessary data. This spreadsheet will calculate the total exhaust CFM for the hood.

Without a Shortridge Instrument

1. Record filter sizes of each hood on raw data sheet.
2. Compute free area of the filters.

   Examples:
   16"x16" = 14x14 = 1.36 ft^2
   10"x20" = 8x18 = 1.00 ft^2
   12"x16" = 10x14 = 0.97 ft^2

3. Record velocity of exhaust gases through filters starting top left to right (5 reading/filter).
4. Find average velocity through each filter.
5. Compute CFM through each filter.

   CFM = Free area x Average Velocity

6. Total the exhaust CFM for each hood.
7. Multiply total exhaust CFM x 0.78 (this is the K factor necessary when using the EDRA velometer).

Adjustments

1. A hood with multiple risers should be balanced according to the cooking load beneath it. For example, if a hood with multiple risers has a charbroiler in the center and several ovens on the ends, the risers should be evenly balanced. This will achieve the most efficient contaminant capture.
2. Perforated supply plenums discharging air around the hood should be set to the designed discharge velocity.
3. When fan pulleys are adjusted, belts should then be re-checked for correct tension and an amperage reading should be taken on the motor to make certain it is not overloaded.
4. The prime objective of balancing is to ensure that each hood will capture all the contaminants produced by the equipment it covers without causing undesirable conditions in the kitchen (i.e. excessive negative pressure, excessive quantities of hot or cold air in the kitchen, etc.)

If problems occur, then refer to the Troubleshooting Section of this manual.

Conclusion

1. Compare specified data to the data recorded. Adjust exhaust as necessary using adjustable pulley on fan. Adjust supply as necessary using dampers on supply risers and adjustable pulley on supply fan.
2. After setting hoods to specified data, the room parameters should be checked.
3. If room parameters are not acceptable yet, the hood can be modified to improve them without decreasing hood performance. This is an acceptable condition.
4. Use a smoke bomb to verify that the hood captures adequately. This can be your final verification.

Complete Equipment List for Performance Evaluations

- Closed End Wrenches (9/16, ½, 7/16, 3/8, 5/16, ¼)
- Socket Set & Ratchet (9/16, ½, 7/16, 3/8, 5/16, ¼)
- Extension for Ratchet
- Cheater Bar
- Screwdrivers (Phillips & Standard, Short & Long)
- Adjustable Wrenches (Large & Small)
- 5/32” 9” Long Allen Wrench
- Multi-key Hex Set (Standard Assortment)
- Tape Measure, Hammers (Hard & Soft)
- 2-Channel Locks
- Vise-Grip Pliers (Medium Size)
- Shortridge Air Multimeter
- Velometer or similar unit, Edra 5LV or Davis LCA6000 recommended
- Manometer or similar unit, Dwyer Magnehelic Model #2000-00 recommended
- Work Gloves
- 6’ Step Ladder
- 20’ Extension Ladder
- Tachometer (Mechanical)
- Amprobe (Volt & Amp Meter)

Troubleshooting

The following table lists causes and corrective actions for possible problems with exhaust hoods. Review this list prior to consulting manufacturer.

Troubleshooting Chart

Problem	Potential Cause	Corrective Action
Smoke is not being captured/Low Exhaust	Filters are clogged	Clean filters, refer to Recommended Cleaning Agents on **page 42**.
	Extreme negative pressure in space	Increase MUA Quantity to balance building
	Exhaust Fan operating in incorrect direction	Check motor wiring to wiring diagram located on fan motor
	Hood overhang on appliance is not correct	Hood should overhang cooking appliances adequately
	Exhaust airflow too low	Increase exhaust fan RPM/HP
	Exhaust Duct Static Pressure higher than design	Increase exhaust fan RPM/HP or have ductwork re-worked
No Exhaust	Exhaust Fan not running	Turn fan disconnect on
		Check fan belts
		Check circuit breaker/voltage
	Exhaust Fan running backwards	Wheel should turn per rotation arrow on fan
		3 Phase Motor direction may be reversed by switching any 2 leads
		1 Phase Motors must be wired per their label
	Fan is on incorrect hood	Make sure electrical package is controlling the correct fan
No Make-Up Air	Make-Up Air Fan not running	Turn Fan disconnect on
		Check fan belts
		Check circuit breaker/voltage
	Make-Up Air Damper closed	Ensure blades open on damper
	Make-Up Air Fan running backwards	Wheel should turn per rotation arrow on fan
		3 Phase Motor direction may be reversed by switching any 2 leads
		1 Phase Motors must be wired per their label
	Make-Up Air Duct Static Pressure higher than design	Eliminate flexible ductwork and remove number of elbows in duct.
	Clogged Make-Up Air Filters	Clean filters, refer to Recommended Cleaning Agents on **page 42**.
	Fire System activated or not armed	Microswitch on Fire System is keeping make-up air from operating and fire system must be armed
Exhaust/Make-Up Air Motor cycles on and off	Motor Over-amping	Make sure motor amperage is below FLA of motor label
		Ensure motor wiring is adequately sized
	Exhaust air temperature too high	Increase exhaust airflow or use higher temperature rated motor
Grease does not drain	Grease trough full	Clean grease trough behind hood filters
Grease dripping from hood	Hood not being cleaned often enough	Clean surface of hood more frequently
	Exhaust rate too low	Speed up exhaust fan
Hood is vibrating	Vibrating Exhaust or MUA Fan	Find source of vibration in fans and correct (Often times a rag or other debris will be in exhaust fan wheel)
Light Globes are full of fluid	Duct Leak above hood	Check ductwork or fan to roof connection for leaks and seal where necessary

MAINTENANCE

To guarantee trouble free operation of this hood, the manufacturer suggests following these guidelines. Most problems associated with hoods are directly related to poor service and maintenance such as not replacing or cleaning filters.

Please record any maintenance or service performed on this fan in the documentation section located at the end of this manual.

General Maintenance

1. Proper operation of the hood depends on how well the hood is maintained. All surfaces should be kept free of grease build-up for sanitation reasons and to reduce the risk of fire.
2. Grease filters must always be installed and clean to reduce build-up of grease in the exhaust duct and to allow for proper exhaust airflow (refer to Recommended Cleaning Agents on **page 42**). Maintain all belts, motors, and electrical connections on fans attached to the hood. Ensure MUA filters are kept clean and there are no leaks in MUA ductwork.

Daily Maintenance

1. Remove the grease baffle filters and clean in a dishwasher or soak sink daily

   (Refer to Recommended Cleaning Agents on **page 42**).
2. Empty and clean grease drain and grease collection cups.
3. Carefully wipe away gritty substances clinging to stainless steel surfaces to avoid scratching.
4. Dilute ½ cup of laundry detergent (e.g. Tide) with one (1) gallon of warm water.
5. Soak a clean cloth in the water detergent solution and wring out the excess water.
6. Wipe the hood surfaces moving in the direction of the grain and periodically rinsing cloth in detergent solution.
7. Using a different clean cloth soaked in clean warm water, wipe the hood surfaces to remove all traces of the detergent solution.
8. Wipe hood surfaces dry with a clean, dry cloth. Clean the hood temperature sensor in riser if equipped with one.
9. Reapply stainless steel polish.

CAUTION

DO NOT use iron wool (Brillo or SOS pads), scrapers, or spatulas to clean hood!

DO NOT use the following substances on or around the hood:

1. Chlorine or chlorine based substances.
2. Acids (e.g. acetic, hydrochloric, sulfuric).
3. Chloride based substances (e.g. mercuric chloride, ferric chloride).

Vapors of the above substances can corrode stainless steel!

Quarterly Maintenance

1. Inspect the unit and duct for grease or air leaks and repair leaks where required.
2. Clean ductwork attached to hood to prevent a mass accumulation of grease.

PSP/AC-PSP Perforated Screen Cleaning and Maintenance

If airflow diminishes or the perforated assembly appears clogged or dirty, follow these steps to clean the area.

Note: You must wear protective gloves during this procedure.

1. Check supply fan. Clean as needed, repair if any damage is found.
2. Check filters. Clean and replace as needed.
3. Check volume dampers to ensure they are set correctly and have not been closed.
4. Remove perforated assemblies from PSP/AC-PSP.
   - Loosen the screws. The screws will have capture washers on the back. These are used to secure the center blank.
   - Remove the center blank. Grasp the perforated assembly and quickly pull, releasing the perforate assembly from the snap clips.
5. Clean perforated assemblies and wipe dry before reinstalling. **Do Not Use Chlorine, Bleach or Other Corrosive Cleaners.**
6. Carefully reinstall perforated assembly and secure with snap clip.
7. Place center blank back into location. Secure with capture washers and screws.

Figure 36 – Perforated Supply

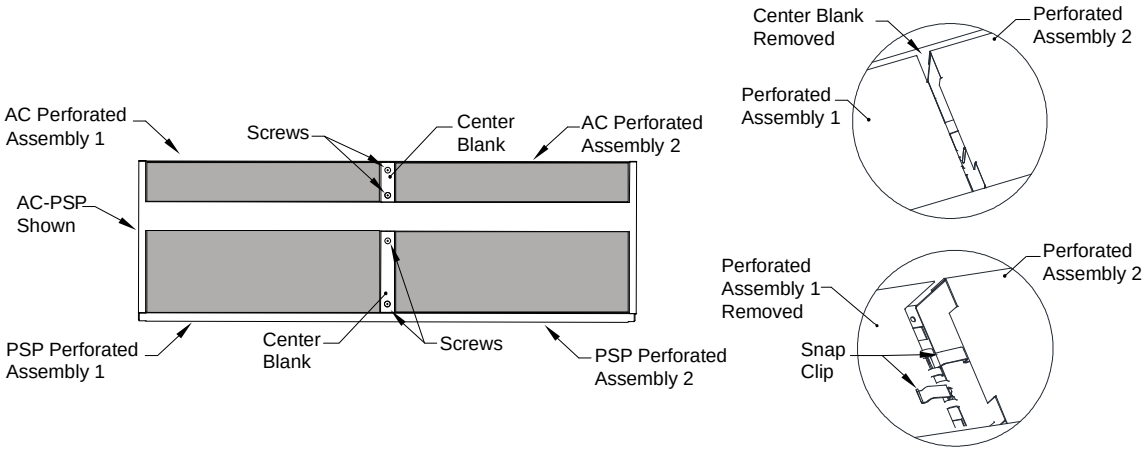

Recommended Cleaning Agents

Cleaning Method/Agent Type	Supplier	Product
Dishwasher Detergent	Ecolab	Solid Powder/Plus
	Johnson Diversey	Suma DiverPak/Plus
Soak Method – Pot and Pan Detergent	Ecolab	Powder Detergent
Soak Method – Commercial Degreaser	Ecolab	DeCarbonizer MPX
	Johnson Diversey	Soak Tank Solution
	Zep	ZEP FS Pot Scrub
Heavy Duty Commercial Degreaser	Ecolab	Grease Cutter Plus
	Johnson Diversey	Suma Star
	Zep	ZEP FS C.I.P. Cleaner

Recommended Commercial Soak Tanks

Description	Supplier	Product	Contact
Heated Soak Tank	Hyginix	FOG Tank® [Use only Tiger Carbon Powder Remover®]	www.fogtank.com (858) 566-6212 info@fogtank.com

Start-Up and Maintenance Documentation

START-UP AND MEASUREMENTS SHOULD BE PERFORMED AFTER THE SYSTEM HAS BEEN AIR BALANCED (Warranty will be void without completion of this form)

Job Information

Job Name	
Address	
City	
State	
Zip	
Phone Number	
Fax Number	
Contact	
Purchase Date	

Service Company	
Address	
City	
State	
Zip	
Phone Number	
Fax Number	
Contact	
Start-Up Date	

Hood Information

Refer to the start-up procedure in this manual to complete this section.

Name Plate and Unit Information	
Model Number	
Job Number	

Maintenance Record

Date	Service Performed

Date	Service Performed

Factory Service Department

Phone: 1-866-784-6900
Fax: 1-919-554-9374

384 Gallatin Park Dr. Suite 201, Bozeman, MT 59715
(O) 406.585.7333 (F) 406.585.7666

Dryer Booster Fan - Tjernlund

TAG: DF-1 – Tjernlund Model LBS Dryer Booster Fan

TAG: DF-1

TJERNLUND PRODUCTS, INC.

1601 Ninth Street • White Bear Lake, MN 55110-6794
PHONE (800) 255-4208 • (651) 426-2993 • FAX (651) 426-9547
Visit our web site • www.tjernlund.com

Dryer Duct Booster®
For Residential Capacity Clothes Dryers

READ OWNERS INSTRUCTIONS CAREFULLY PRIOR TO INSTALLATION. SAVE THESE INSTRUCTIONS.

IMPORTANTES POUR LA SÉCURITÉ. CONSERVEZ CES INSTRUCTIONS.

DRYER DUCT BOOSTER® FAN
MODEL LB2

DESCRIPTION & PURPOSE

The LB2 is Listed to the updated DEDPV, Dryer Exhaust Duct Power Ventilator supplement to UL705 & CSA C22.2 #113-12. The 2015 IRC restricts the use of dryer booster fans to those tested to the DEDPV supplement. Incorporating dryer booster fans in clothes dryer ducts has increased substantially with the placement of laundry rooms not adjacent to outside walls. Duct runs often exceed 25 equivalent feet (90 degree elbows equal 5 additional feet of duct length, 45 degree elbows equal 2.5 feet) that many clothing dryer manufacturers set as a maximum duct length. The LB2 booster fan is rated for duct lengths up to 150 equivalent feet.

SPECIFICATIONS & COMPONENTS

MODEL LB2

Blower: 160 cfm

Motor: 115 Volts ~ 60 Hz
0.80 amps maximum

Intertek

UL705
CSA C22.2 #113-12

Impeller: Reverse inclined, particulate handling

Components: (1) LB2 wired fan assembly
(1) Notification Panel
(1) 16 gauge galvanized steel mounting bracket
(1) mounting hardware packet

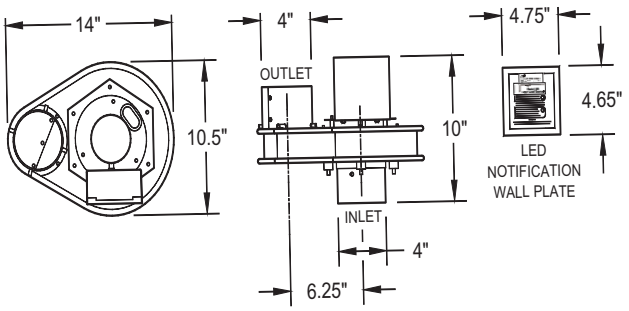

INSTALLATION RESTRICTIONS

⚠ WARNING

This product has rotating parts, do not plug into power if duct is not connected on both ends of Dryer Duct Booster®.

The installation must comply with local electrical and mechanical, fuel gas, or building codes, and must be inspected and accepted by local authorities having jurisdiction.

CAUTION: DO NOT INSTALL IN AN EXHAUST DUCTWORK OF A CLOTHES DRYER WHOSE INSTRUCTIONS PROHIBIT THE INSTALLATION OF A CLOTHES DRYER BOOSTER FAN. **ATTENTION:** NE PAS INSTALLER DANS LE CONDUIT D'ÉVACUATION DE LA SÉCHEUSE SI LES INSTRUCTIONS INTERDISENT L'INSTALLATION D'UN VENTILATEUR AUXILIAIRE.

CAUTION: DO NOT INSTALL IN AN EXHAUST DUCTWORK WHERE THE EQUIVALENT DUCT LENGTH IS LESS THAN OR EQUAL TO 7.62 METERS (25 FT). **ATTENTION:** NE PAS INSTALLER DANS UN CONDUIT D'ÉVACUATION MESURANT 7,62 MÈTRES (25 PI) DE LONGUEUR OU MOINS.

CAUTION: Do not install less than 5 linear feet (1.524 Meters) from clothes dryer exhaust outlet.
Do not exhaust air in excess of 167° F (75° C).

The Dryer Booster Fan must be accessible after the installation is completed.

This Dryer Booster Fan may not be used in conjunction with dryers designated as high output.

WARNING - If no lights are on, or a blinking or solid Red LED is displayed on the Notification Panel turn off clothes dryer and reference "Notification Panel Status Modes" section of these instructions on page 3.

WARNING - TO REDUCE THE RISK OF FIRE, ELECTRICAL SHOCK, OR INJURY TO PERSONS, OBSERVE THE FOLLOWING:

1) Your clothing dryer installation incorporates a dryer exhaust duct power ventilator (DEDPV) which may be in a different location than your dryer, such as in an attic, crawl space or basement.

©2015 TJERNLUND PRODUCTS, INC. ALL RIGHTS RESERVED

2) Your clothing dryer depends on the DEDPV Booster Fan for its safe and efficient operation. Operating your dryer without a functional DEDPV will result in inefficient dryer operation, excess energy consumption and a possible fire hazard. See warnings on the Notification Panel.

3) The Notification Panel shall be permanently installed within the space in which the clothes dryer is installed. In the case of a dryer installed in an alcove provided with a door or doors, the Notification Panel shall be permanently installed within the alcove or be immediately adjacent to the doors of the alcove. The Notification Panel shall be located where it will be readily visible after the dryer is installed without having to open any doors other than those necessary to access the dryer.

AVERTISSEMENT - POUR RÉDUIRE LE RISQUE D'INCENDIE, DE CHOC ÉLECTRIQUE OU DE BLESSURE,RESPECTER LES CONSIGNES QUI SUIVENT:

1) Votre sécheuse est équipée d'un ventilateur auxiliaire qui peut être installé loin de la sécheuse,comme dans un grenier, un vide sanitaire ou un sous-sol.

2) Le ventilateur auxiliaire est essentiel au fonctionnement sécuritaire de la sécheuse. Désactiver ce ventilateur nuira au fonctionnement de la sécheuse, entraînera un augmentation de la consommation d'électricité et possiblement un risque d'incendie. Lire la mise en garde sur le panneau d'indication d'alarme.

3) Le panneau d'alarme doit être installé de façon permanente dans l'espace où se trouve la sécheuse. Si la sécheuse est installée dans une alcôve fermée par une porte, le panneau d'alarme doit être installé dans l'alcôve ou à proximité immédiate de la porte de l'alcôve. Le panneau d'alarme doit être visible une fois la sécheuse installée sans avoir à ouvrir une porte autre que celle donnant accès à la sécheuse.

The LB2 must be installed in an area in which ambient air temperatures are between -20° F and 140° F (-29° C and 60° C) and ambient humidity does not exceed 85% relative humidity.

Do not install the LB2 in a position where dryer exhaust temperatures exceed 167°F (75° C) at LB2 inlet. LB2 thermal fuse is set at 186° - 196° F (86 - 91° C).

IMPORTANT: The dryer duct in which the LB2 is installed **must** terminate with a dryer exhaust hood with a flapper or have a backdraft damper installed near the exterior termination.

MINIMUM AND MAXIMUM DRYER DUCT LENGTH IN EQUIVALENT FEET*

This product is intended for use in 4" diameter dryer exhaust ducts from 30 to 150 equivalent feet* in length.

*Equivalent feet equals linear feet plus 5 additional feet for each 90° elbow and 2.5 feet for each 45° elbow (assumes 4" diameter rigid metal duct).

Dryer Booster Fan Distance from Dryer and Termination Hood

The Dryer Booster fan positioning is based on the total Duct Length Equivalent Feet*. Calculate the Total Duct Length Equivalent Feet and reference how close the Dryer Booster can be installed to the Dryer without a Secondary Lint Trap (Column X) or with a Secondary Lint Trap (Column Y). The Dryer Booster **should not** be installed closer to the Dryer than what is indicated in those columns. If a Secondary Lint Trap (Tjernlund model LT4) is needed, it must be installed about 4 linear feet from the Dryer and the Booster must be installed after the Secondary Lint trap (between the Secondary Lint Trap and outdoor termination hood).

For best performance install Dryer Booster no closer than 2 feet from the termination to the outdoors and avoid installing elbows within 2 feet of the Dryer Booster.

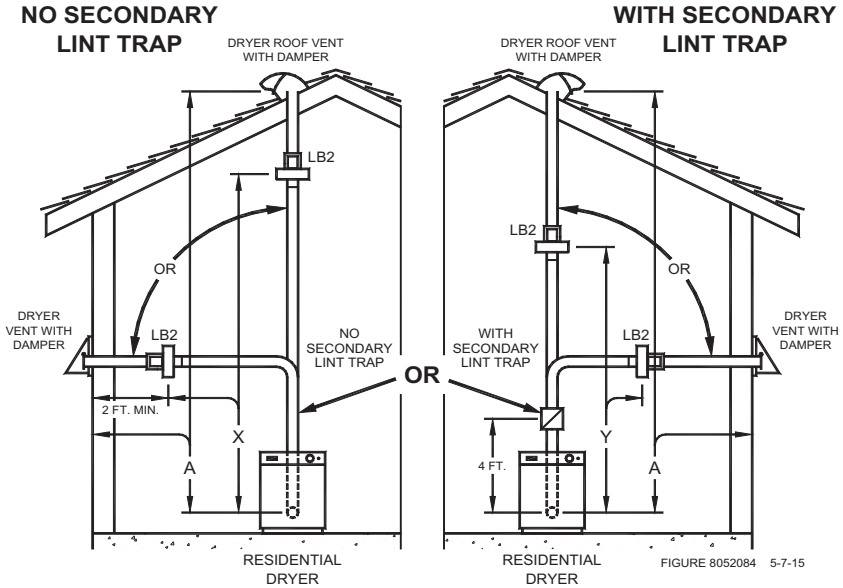

A = DRYER VENT DUCT TOTAL EQUIVALENT LENGTH.

X = SHORTEST DISTANCE LB2 CAN BE TO DRYER WITHOUT SECONDARY LINT TRAP. SEE TABLE.

Y = SHORTEST DISTANCE LB2 CAN BE TO DRYER WITH SECONDARY LINT TRAP. SEE TABLE.

Total Duct Length In Equivalent Feet* (A)	LB2 Minimum Distance from Dryer In Equivalent Feet*	
	With No Secondary Lint Trap (X)	With Secondary Lint Trap 4 Feet from Dryer (Y)
30	15	8
40	20	8
50	25	8
60	30	8
70	30	10
80	35	10
90	35	15
100	40	15
110	40	20
120	40	20
130	45	20
140	45	20
150	45	25

MOUNTING DRYER DUCT BOOSTER

Do not install the LB2 with the discharge facing down, (See Diagram A).

Do not install the LB2 in an orientation where the sensing tube port points directly down where it might fill with condensation. By design, the sensing tube port is offset so it does not point directly down in this mounting orientation. If the LB2 is mounted to warped or not square material, the sensing tube may end up pointing directly down where condensation can pool in sensing tube port, (See Diagram B).

DIAGRAM A

DIAGRAM B

IF INSTALLING THE LB2 IN THIS ORIENTATION, MAKE SURE THE SENSING PORT DOES NOT POINT DIRECTLY DOWN WHERE CONDENSATION CAN POOL IN SENSING TUBE PORT. THIS MIGHT OCCUR IF LB2 IS MOUNTED TO MATERIAL THAT IS WARPED OR NOT SQUARE.

NOTE: **Do not** use screws in the dryer duct installation. The LB2 motor can be mounted in a horizontal or vertical orientation. Discharge must face up if mounted vertically, (See Diagram C). Do not install the LB2 in an orientation where the sensing tube port might fill with condensation, (See Diagram B).

1. Considering dryer duct routing and LB2 location, use the (4) #10 x 1 3/4" wood screws to secure the mounting bracket to the wood structure using the (4) 3/8" holes in the ½ moon portion of the bracket.
2. Based on the desired mounting orientation, position the mounting bracket onto 3 of the 4 vibration isolators located on the LB2. Tighten the bracket in place using the (3) provided 1/4" nuts. Do not over tighten or damage to rubber mounting isolators may occur.
3. Insert dryer duct on inlet and outlet of LB2 and secure using reinforced foil duct tape.

DIAGRAM C

HORIZONTAL MOUNTING

VERTICAL MOUNTING MUST DISCHARGE FACING UP

MOUNTING DRYER BOOSTER NOTIFICATION PANEL (MOUNT IN VISIBLE LOCATION BY CLOTHES DRYER)

IMPORTANT: The Notification Panel shall be permanently installed within the space in which the clothes dryer is installed. In the case of a dryer installed in an alcove provided with a door or doors, the Notification Panel shall be installed permanently within the alcove or immediately adjacent to the doors of the alcove. The Notification Panel shall be located where it will be readily visible after the dryer is installed without having to open any doors other than those necessary to access the dryer.

NOTE: The Dryer Duct Booster includes a 50' control cable. If the distance between the Notification Panel and the Dryer Duct Booster is greater than the length of the cable, splice a section of 3 conductor PVC sheathed 19 AWG or larger, 105 degree C thermostat cable to the supplied cable. Make sure the color coded leads remain consistent. An NEC approved accessible junction box and cover must be used to contain the splice. Splices shall be made mechanically secure and insulated with appropriately sized wire nuts or with a similarly approved connection method. Strain relief hardware contained within the NEC approved junction box shall be utilized. Do not use an existing line voltage electrical box to house these low voltage connections. Line voltage to these leads will cause damage to the LB2 control system and may cause personal and/or property damage.

The Notification Panel Terminal Block may be installed in a remodeling or standard electrical box or without an electrical box.

INSTALLING NOTIFICATION PANEL WITH AN ELECTRICAL BOX

1. Install standard or remodeling single gang electrical box and route control wire from LB2 into electrical box and leave hanging out for connection to Notification Panel, (See Diagram D).
2. Wire White, Red & Green wires from Dryer Booster cable to Notification Panel terminal block as shown, (See Diagram E)
3. Carefully stuff wires into electrical box, screw Notification Panel terminal block mounting plate to electrical box with Green LED light on top, (See Diag. F). Adhere Notification Panel label to coverplate & screw coverplate to notification panel holder with provided screws, (See Diagram G).

DIAGRAM D

DIAGRAM E

DIAGRAM F

DIAGRAM G

INSTALLING NOTIFICATION PANEL WITHOUT AN ELECTRICAL BOX

1. Cut opening in sheetrock 1-1/4" wide by 2-1/4" tall, hold Notification panel terminal block mounting plate over opening and mark top and bottom holes for wall anchors, (See Diagram H). Once marked, drill 3/16" holes for wall anchors and feed control cable through opening, (See Diagram I).
2. Wire White, Red & Green wires from Dryer Booster cable to Notification Panel terminal block as shown, (See Diagram J)
3. Adhere Notification Panel label to coverplate and screw coverplate to electrical box with provided screws, (See Diagram G). Screw Notification Panel terminal block holder to wall anchors with Green LED light on top, (See Diagram K). Adhere Notification Panel label to coverplate and screw coverplate to notification panel holder with provided screws, (See Diagram L).

DIAGRAM H

DIAGRAM I

DIAGRAM J

DIAGRAM K

DIAGRAM L

NOTIFICATION PANEL STATUS LIGHTS

Flashing Red and Green LED's...Control calibrates to exhaust duct pressure drop when 1st plugged in

Slow Flashing Green LED.....Idle state, No dryer operation sensed

Fast Flashing Green LED.....Sensor is detecting dryer turning on or off

Steady Green LED.....Dryer Booster Fan on

Flashing Red LED.....Blockage sensed or Dryer Booster Fan not operating

Steady Red LED.....High temps detected, Dryer Booster Fan is shut off

LB2 CALIBRATION PROCEDURE

IMPORTANT: Make sure all of the following are performed before supplying power to the LB2.

- Confirm the LB2 and the entire duct system is completely installed and clear of lint. (Required for proper calibration.)
- Confirm the dryer is off and cool.
- Confirm all lint traps are empty of lint and reinstalled in their proper position.
- Confirm the Dryer is Empty of Clothing.
- Confirm the Door on the Dryer is Closed.
- Supply Power to the LB2 by plugging in the power cord or cycling the power circuit the LB2 is plugged into.

NOTE: Within 45 seconds of the LB2 Dryer Booster being supplied power, it will come on and run for up to 45 seconds. This is a calibration period and will only happen when the LB2 is first powered. During this time the Red and Green LED's on the Notification Panel will both flash quickly in an alternating sequence. Once the calibration process is over, only the Green light will flash and at a much slower pace.

Once the LB2 has been calibrated and just the Green light is flashing on for 1/2 second, off for 2 seconds, the clothes dryer can be used.

NOTIFICATION PANEL STATUS MODES

MONITOR MODE: (Green LED blinks 1/2 second on, 2 seconds off)

- When the dryer is not operating, the Green LED on the Notification Panel will blink for 1/2 second on, 2 seconds off. This is normal operation and is an indication that the LB2 is ready for the Dryer to come on.

DRYER TRANSITION MODE: (Green LED flashes rapidly)

- When the dryer is turning on or off, the LB2 senses the change in pressure. During this time period, the Green LED will flash rapidly 1/2 second on, 1/2 second off.

PROPER VENTING MODE: (Green LED continuously on)

- When the LB2 is on, the Green LED will be continuously on.

PRESSURE FAULT MODE: (Red LED flashing)

- If at anytime during the calibration or operating cycle of the LB2 and the Dryer there is excessive pressure sensed, the Notification Panel will flash the Red LED. The LB2 will continue to operate to try and clear the blockage. Stop the dryer immediately and have the vent system inspected by someone qualified to do so. The power to the LB2 will need to be removed to clear the fault condition and turn the LB2 motor off. The LB2 calibration cycle will need to be performed. (See LB2 Troubleshooting for complete details)

TEMPERATURE FAULT MODE: (Red LED solid)

- If an excess temperature is sensed by the LB2, the LB2 motor will shut off and a constant Red LED will be on at Notification Panel. Stop the dryer immediately and have the vent system inspected by someone qualified to do so. The power to the LB2 will need to be removed to clear the fault condition and the LB2 Calibration Procedure will need to be performed. (See LB2 Troubleshooting for complete details)

NOTIFICATION PANEL HAS NO LIGHTS:

- The Notification Panel should always have a Green LED light on in at least a slow flash mode (1/2 second on, 2 seconds off). Do Not operate the dryer if there is no Green LED. If no lights are illuminated on the Notification Panel for greater than 5 seconds, there is an issue with the LB2 installation or the LB2. Confirm the LB2 has Power and that the Notification Panel has been installed (Wired) correctly. If the dryer is operating and there is no Green LED on the Notification Panel, stop the dryer immediately and have the vent system inspected by someone qualified to do so. Contact Tjernlund at 1-800-255-4208 with further questions. (See LB2 Troubleshooting for complete details)

LB2 ELECTRICAL BOX COMPONENTS

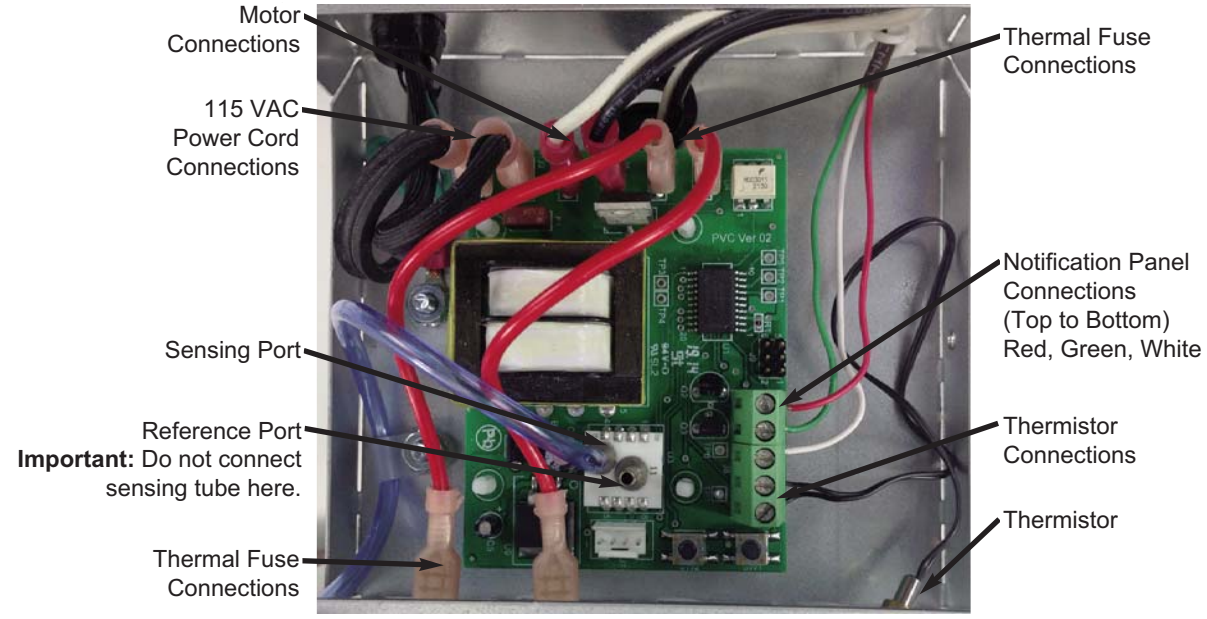

LB2 ELECTRICAL BOX WIRING CONNECTIONS (INSTALLER MUST CONNECT WIRES TO NOTIFICATION PANEL)

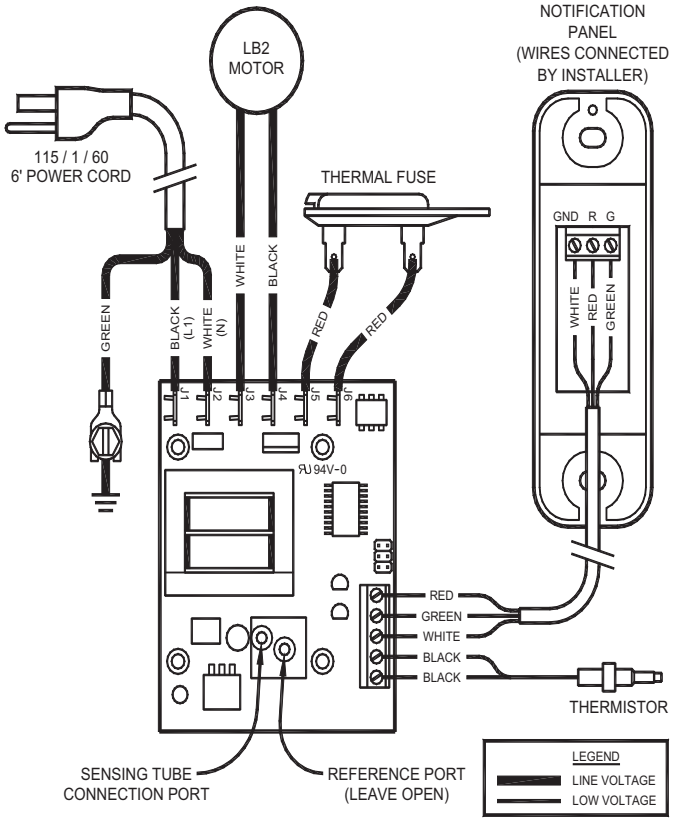

MAINTENANCE & SERVICE

Reference Dryer Manufacturer's recommendations for Dryer exhaust vent cleaning and maintenance. Depending on use, but at least every 2 years, we recommend cleaning the dryer exhaust vent. On an annual basis make sure that exhaust hood flapper or backdraft damper is clean of lint and moves freely. The LB2 motor is maintenance free. If the LB2 is acting erratically, perform the calibration procedure as outlined on page 3. The fan impeller is designed for particulate handling, however, if cleaning is needed perform the steps below.

WARNING: Do not blow into the pressure sampling tube in the direction of the circuit board. The pressure sensor is a very sensitive device that can be destroyed if subjected to the pressure created by someone blowing strongly into it.

CLEANING INSTRUCTIONS

WARNING: Disconnect Power to the LB2 before servicing.

1. Loosen the electrical box cover screws from the LB2 using a ¼" nut runner to access the housing cover plate stud within the box.
2. Carefully remove sensing tube from inlet pipe by prying loose with a screwdriver, (See Diagram M).
3. Remove the (6) 8-32 nuts from the outside edges of the housing cover plate, (See Diagram N).
4. Carefully remove the Motor / Impeller assembly by lifting the assembly straight off the housing studs, (See Diagram O).
5. Clean the Impeller and Housing
6. Reassemble in the reverse order.
7. Re-calibrate the LB2. See LB2 Calibration Procedure on page 3.

DIAGRAM M

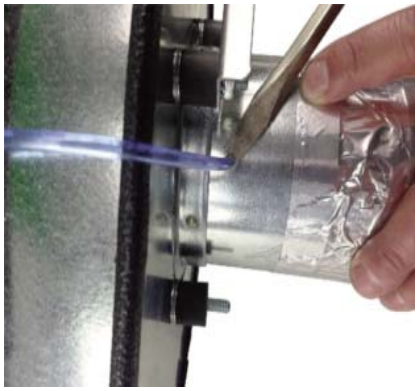

CAREFULLY REMOVE SENSING TUBE FROM INLET PIPE BY PRYING LOOSE WITH A SCREWDRIVER UNDERNEATH TUBING.

DIAGRAM N

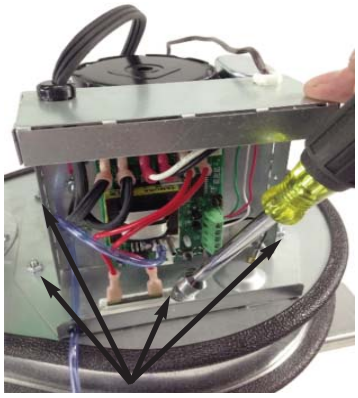

REMOVE (6) 8-32 NUTS FROM OUTSIDE EDGES OF MOTOR / IMPELLER ASSEMBLY.

DIAGRAM O

CAREFULLY REMOVE MOTOR / IMPELLER ASSEMBLY.

If you have any questions about your LB2 we suggest that you contact your installer, contractor or service agency. If you require technical information contact Tjernlund Products, Inc. at 1-800-255-4208 or visit www.tjernlund.com.

When contacting Tjernlund Products, Inc., please have the following information available:

1. Name and address of installer and service agency.
2. Job code on nameplate, date of original installation and dates any service work was performed.

LB2 TROUBLESHOOTING

IMPORTANT: All faults are indicated by the Red LED light or no Lights on Notification Panel. Faults must be investigated as outlined below and must only be cleared once a thorough investigation of the dryer vent system and dryer has been performed by someone qualified to do so. Perform LB2 Calibration Procedure on Page 3 to clear any faults once investigation is complete.

NOTIFICATION PANEL HAS NO LIGHTS:
The Notification Panel should always have a Green LED light on in at least a slow flash mode (1/2 second on, 2 seconds off). Do Not operate the dryer if there is no Green LED. If no lights are illuminated on the Notification Panel for greater than 5 seconds, there is an issue with the LB2 installation or the LB2. Confirm the LB2 has Power and that the Notification Panel has been installed (Wired) correctly. If the dryer is operating and there is no Green LED on the Notification Panel, stop the dryer immediately and have the vent system inspected by someone qualified to do so. Contact Tjernlund at 1-800-255-4208 with further questions.

PRESSURE FAULT MODE: (Red LED flashing)
If at anytime during the calibration or operating cycle of the LB2 and the Dryer there is excessive positive pressure of +0.16" W.C. sensed for over four minutes, the Notification Panel will flash the Red LED. Stop the dryer immediately and have the vent system inspected by a qualified person. This is an indication of excessive back pressure in the vent system. Verify LB2 is located per Minimum

Distance Chart From Dryer on page 1. Move LB2 further away from dryer if necessary. Make sure termination hood flapper or backdraft damper opens. Check for blockage in vent between LB2 and hood. Verify the LB2 motor is coming on when the dryer turns on. If the motor is not turning on, make sure the dryer and vent is completely cool and perform the LB2 Calibration Procedure on Page 3. If motor still does not turn on after being recalibrated, remove power from the LB2 and remove the RED leads from thermal fuse and check for continuity across the thermal fuse, if open replace fuse and inspect dryer vent system and dryer thoroughly for signs of vent blockage and high heat. If thermal fuse is closed replace RED leads on fuse and apply 115 VAC to LB2 motor leads to verify motor is good. If motor is good, replace LB2 circuit board. If motor is bad, replace motor.

If there is excessive negative pressure over -1.00" W.C. sensed, that might be an indication that the dryer vent run is too long on inlet side of LB2 or the dryer lint trap or any secondary lint trap, if installed, needs to be cleaned. Clean Dryer and Secondary Lint Traps and verify total equivalent vent length and LB2 mounting location conforms with Minimum and Maximum Dryer Duct Length Section on Page 1. Move LB2 closer to dryer if necessary. Perform LB2 Calibration Procedure on Page 3 to clear any faults once investigation is complete.

TEMPERATURE FAULT MODE: (Red LED solid)
If at anytime excessive temperature is sensed by the LB2 thermistor for 15 seconds, the LB2 will shut off and display a constant Red LED. Stop the dryer immediately and have the vent system inspected for signs of blockage or high heat by a qualified person. Remove power from the LB2 and remove the RED leads from thermal fuse and check for continuity across the thermal fuse, if open replace fuse and inspect dryer vent system and dryer thoroughly for signs of vent blockage and high heat. Perform LB2 Calibration Procedure on Page 3 to clear any faults once investigation is complete.

REPLACEMENT PARTS AND WARRANTY

DESCRIPTION	PART NUMBER
Sensing Tube Kit	950-9130
LB2 Circuit Board	950-9134
Motor Kit	950-9101
Thermal fuse Kit	950-9132
Thermistor Kit	950-9133
Notification Assembly Kit	950-9131
Secondary 4" Lint Trap	LT4

WHAT IS NOT COVERED

Product installed contrary to our installation instructions.

Any freight charges related to the return of the defective part.

Product that has been altered, neglected or misused.

TJERNLUND LIMITED FIVE YEAR MATERIAL AND NO-CLOG WARRANTY

Tjernlund Products, Inc. warrants to the original purchaser of this product that the product will be free from defects due to faulty material or workmanship for a period of (5) years from the date of original purchase or delivery to the original purchaser, whichever is earlier. Remedies under this warranty are limited to repairing or replacing, at our option, any product which shall, within the above stated warranty period, be returned to Tjernlund Products, Inc. at the address listed below, postage prepaid. Additionally, Tjernlund warrants to the original purchaser of this product that the unit will not become inoperable due to lint blockages that restrict the impeller's motion for a period of (5) years from the date of original purchase or delivery to the original purchaser, whichever is earlier. THERE ARE NO WARRANTIES WHICH EXTEND BEYOND THE DESCRIPTION ON THE FACE HEREOF, AND TJERNLUND PRODUCTS, INC. EXPRESSLY DISCLAIMS LIABILITY FOR INCIDENTAL OR CONSEQUENTIAL DAMAGES ARISING FROM THE USE OF THIS PRODUCT. THESE WARRANTIES ARE IN LIEU OF ALL OTHER EXPRESS WARRANTIES AND NO AGENT IS AUTHORIZED TO ASSUME FOR US ANY LIABILITY ADDITIONAL TO THOSE SET FORTH IN THESE LIMITED WARRANTIES. IMPLIED WARRANTIES ARE LIMITED TO THE STATED DURATION OF THIS LIMITED WARRANTY. Some states do not allow limitation on how long an implied warranty lasts, so that limitation may not apply to you. In addition, some states do not allow the exclusion or limitation of incidental or consequential damages, so that above limitation or exclusion may not apply to you. This warranty gives you specific legal rights and you may also have other rights which may vary from State to State. Send all inquiries regarding warranty work to Tjernlund Products, Inc. 1601 9th Street, White Bear Lake, MN 55110-6794. Phone (651) 426-2993 • (800) 255-4208 • Fax (651) 426-9547 • Email fanmail@tjfans.com.

384 Gallatin Park Dr. Suite 201, Bozeman, MT 59715
(O) 406.585.7333 (F) 406.585.7666

On Broadway

Exhaust Fans

Exhaust Fans – Captive Aire

Model: TAG: EF-1 - Captive Aire Model NNCA16FA

Model: TAG: EF-2 - Captive Aire Model DU12HFA

TAG: EF-1

Power Roof Ventilator/Fans

Installation, Operation, and Maintenance Manual

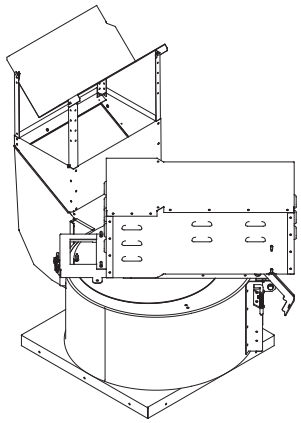

Curb Mount Utility Set

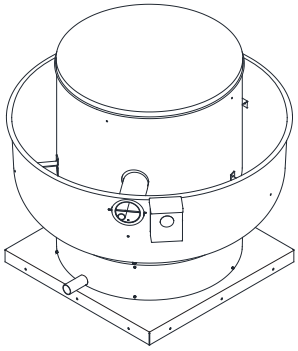

Up-blast Centrifugal Fan

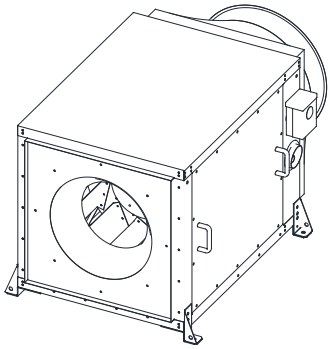

Square Inline

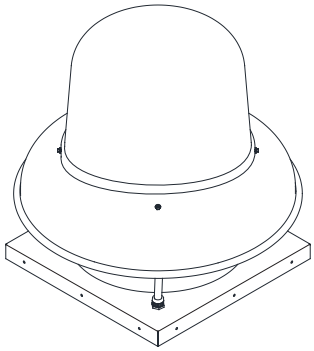

Down-blast Centrifugal Fan

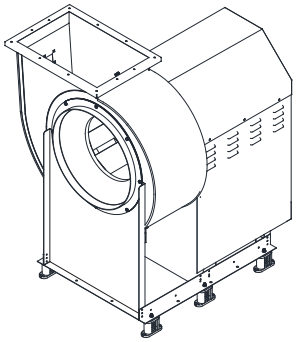

Utility Set

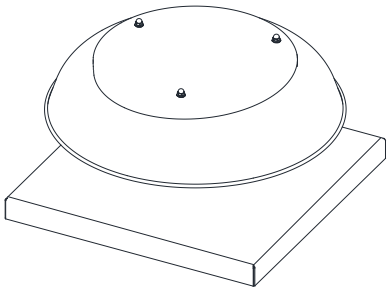

Axial Fan

RECEIVING AND INSPECTION

Upon receiving unit, check for any interior and exterior damage, and if found, report it immediately to the carrier. Check that all accessory items are accounted for and free of damage. Turn the blower wheel by hand to verify free rotation and check the damper (if supplied) operates freely.

WARNING!!

Installation of this ventilator should only be performed by a qualified professional who has read and understands these instructions and is familiar with proper safety precautions. Improper installation poses serious risk of injury due to electric shock, contact with rotating equipment, and other potential hazards. Read this manual thoroughly before installing or servicing this equipment. ALWAYS disconnect power prior to working on fan.

Save these instructions: This document is the property of the owner of this equipment and is required for future maintenance. Leave this document with the owner when installation or service is complete.

Table of Contents

WARRANTY 3
INSTALLATION 4
MECHANICAL 4
- Site Preparation 4
- Roof Mounting 5
- Wall Mounting 5
- Curb and Ductwork 6
- Duct Routing 8
- Up-blast Wall Mount Details 9
- Up-blast Through Wall Mount Details 10
- Up-blast Roof Mount Installation 11
- Down-blast Installation 11
- Typical Hinge Kit - Centrifugal Up-blast 12
- Heavy Duty (HD) Hinge Kit Installation 14
- Heavy Duty (HD) Locking Hinge Kit Installation 16
- Typical Grease Box Installation 18
  - Up-blast Utility Set Installation 19
  - Up-blast Utility Set Inlet Options 20
  - Inlet Service Duct Option 21
  - Up-blast Utility Set 22
  - Up-blast Utility Set Indoor Installation 23
- Up-blast Curb Mounted Utility Set Hinging Instructions 24
- Up-blast Curb Mounted Utility Set Discharge Extension Option 25
- Up-blast Curb Mounted Utility Set Rain Cap Option 25
- Square Inline Mounting Configurations 26
- Square Inline Mounting Bracket Detail 26
- Square Inline Fan Drain 27
- Square Inlet Discharge Options 27
- Square Inline Discharge Configurations 28

ELECTRICAL 29
- Permanent Split Capacitor (PSC) Motor Speed Control 30
- Motorized Intake Damper 30
- Electronically Commutated Motor (ECM) Speed Control 31
  - External PWM Signal 31
- Unit Mount Controller 31
- External PWM Signal 32
- Motor Speed Controller (MSC) Installation 33
- MSC Controls Overview 34
  - MSC Menu 34
  - Input Threshold 36
  - MSC Menu Tree 37
- Fan to Building Wiring Connection 38
- Variable Frequency Drive (VFD) 39
  - Variable Frequency Drive (VFD) Installation 40
  - Input AC Power 40
  - VFD Output Power 40
  - VFD Programming 41
  - ACTECH SMV VFD 42

START-UP OPERATION 43
- Start-up Procedure 43
- Pulley Adjustment 44
- Pulley Alignment/Proper Belt Tension 45
- Bushing Information 46
- Pulley Combination Chart 47
- Troubleshooting 48
  - MSC Troubleshooting 49

MAINTENANCE 50
- General Maintenance 50
- 2 Weeks After Start-up 50
- Every 3 Months 50
- Yearly 50
- Start-up and Maintenance Documentation 52

WARRANTY

This equipment is warranted to be free from defects in materials and workmanship, under normal use and service, for a period of 2-years from date of shipment. This warranty shall not apply if:

1. The equipment is not installed by a qualified installer per the MANUFACTURER'S installation instructions shipped with the product.
2. The equipment is not installed in accordance with Federal, State, or Local codes and regulations.
3. The equipment is misused or neglected, or not maintained per the MANUFACTURER'S maintenance instructions.
4. The equipment is not installed and operated within the limitations set forth in this manual.
5. The invoice is not paid within the terms of the sales agreement.

The MANUFACTURER shall not be liable for incidental and consequential losses and damages potentially attributable to malfunctioning equipment. Should any part of the equipment prove to be defective in material or workmanship within the 2-year warranty period, upon examination by the MANUFACTURER, such part will be repaired or replaced by MANUFACTURER at no charge. The BUYER shall pay all labor costs incurred in connection with such repair or replacement. Equipment shall not be returned without MANUFACTURER'S prior authorization, and all returned equipment shall be shipped by the BUYER, freight prepaid to a destination determined by the MANUFACTURER.

NOTE: To receive warranty coverage for this product, copy and print out the "Start-up and Maintenance Documentation" on page 52. Fill in all details required. Fax the page to 1-919-516-8710 or call 1-866-784-6900 for email information within thirty (30) days of purchase.

INSTALLATION

It is imperative that this unit is installed and operated with the designed airflow and electrical supply in accordance with this manual. If there are any questions about any items, please call the service department at **1-866-784-6900** for warranty and technical support issues.

MECHANICAL

WARNING: DO NOT RAISE VENTILATOR BY THE HOOD, BLOWER OR MOTOR SHAFT, OR BEARINGS – USE LIFTING POINTS PROVIDED OR A SLING.

Site Preparation

1. Provide clearance around installation site to safely rig and lift equipment into its final position. Refer to **Figure 1** for lifting point locations. Supports must adequately sustain equipment. Refer to manufacturer's estimated weights.
2. Consider general service and installation space when locating unit.
3. Locate unit close to the space it will serve to reduce long, twisted duct runs.
4. The fan discharge must be located at least 10 feet away from any supply intakes. The fan discharge shall be in accordance with the applicable building code provisions.
5. Inline fans can be interior mounted, motors shall be located outside of the exhaust air-stream.
6. Interior mounted fans must have a grease drain that is piped to an approved grease reservoir.
7. Interior mounted fans are considered part of the duct system. Clearance to combustibles must always be maintained. If necessary, the fan may be wrapped to maintain the duct system fire rating.

NOTE: Never Lift Fans From Shafts and Bearings.

Figure 1 - Recommended Lifting Points

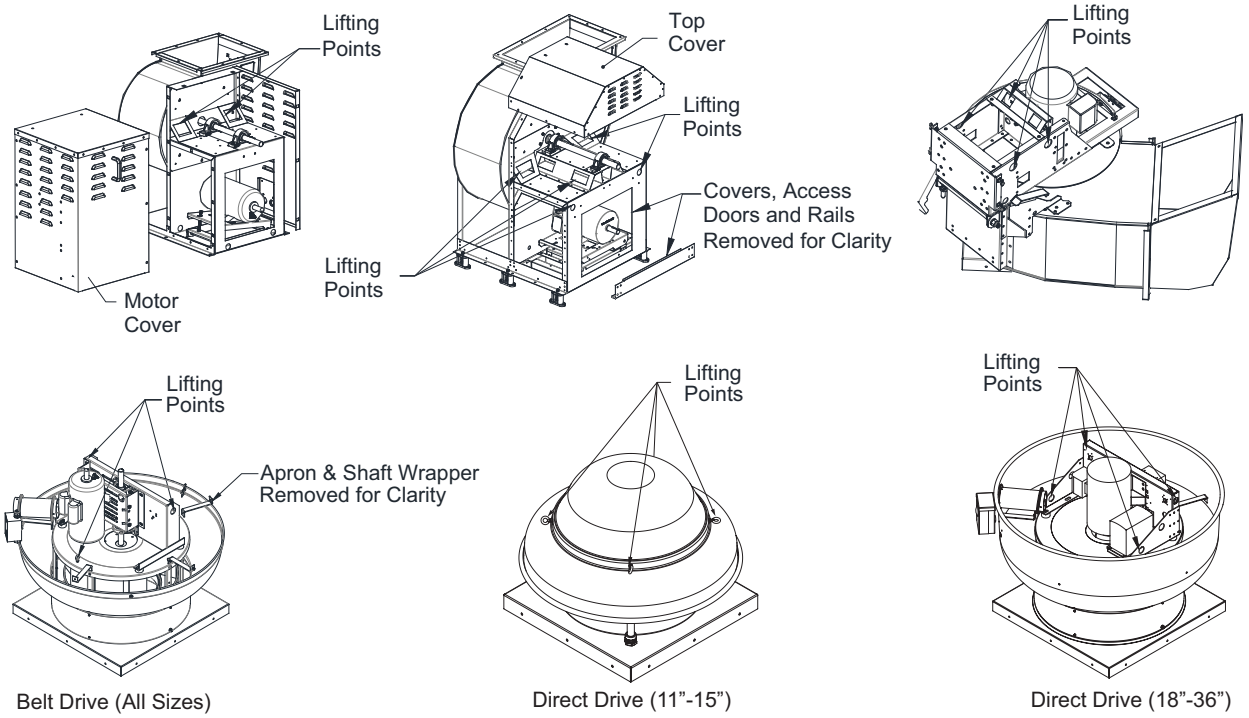

Roof Mounting

Ventilators are designed for installation atop a prefabricated or factory-built roof curb. If an up-blast fan is used for kitchen hood exhaust, ensure discharge is at least 40” above the roof surface in accordance with NFPA 96. Refer to Authority Having Jurisdiction (AHJ) requirements prior to installation. Follow manufacturer’s instructions for proper curb installation.

1. If a back-draft damper is required, it should be secured within the curb using sheet metal screws to the bottom of a damper box or damper support flanges located below the roof deck.

CAUTION: NFPA 96 RECOMMENDS THAT DAMPERS SHOULD NOT BE INSTALLED WHEN EXHAUSTER IS USED FOR REMOVAL OF SMOKE AND GREASE LADEN VAPORS FROM COMMERCIAL KITCHEN EQUIPMENT. CONSULT STATE AND LOCAL CODES FOR DETAILED REQUIREMENTS.

2. On an up-blast fan, normally the power cord is brought through the conduit tube located on the top skirt on the outside of the unit.
3. Curb to substrate installation: Secure curb flange to substrate using suitable hardware (not furnished). Refer to **Table 1** and **Table 2** for hardware details.
4. Fan to curb installation: Use 1/4”-14 x 2” galvanized self-drilling screws. 19” through 40” fan bases use a minimum of 12 screws (3 per side). 44” fan bases use a minimum of 16 screws (4 per side).
5. Before connecting power source to the fan motor, verify power line wiring is de-energized. Check that the power source is compatible with the requirements of your equipment.
6. Connect power supply wiring to the motor as indicated on the motor nameplate or terminal box cover.
7. Before powering up fan, check ventilator wheel for free rotation.
8. Re-install motor cover. Check all fasteners for tightness.
9. A drain pipe is provided for single-point drainage of water and residue on up-blast fans. The drain pipe should be positioned towards the roof slope. Some means for collection of this residue must be provided, either a container directly under the trough or use of an adapter and pipe to carry the residue to a remote collection point. An optional downspout and grease collection box is available as an accessory item for up-blast fans.

Wall Mounting

Refer to Authority Having Jurisdiction (AHJ) requirements prior to installation. Follow manufacturer’s instructions for proper curb installation.

1. The same instructions, warnings, and notes found under Roof Mounting section will apply. Follow steps 1-9 from above, with additional mounting information below.
2. **Masonry Wall/Steel Studs:** Around the wall opening, install an angle iron frame at least 2” x 2” x 1/4”. Frame should be approximately 1/2” smaller than the inside base dimension of the ventilator. For masonry, secure the lead cinch type anchors with non-ferrous bolts (3 per side). For steel, use self-drilling screws (3) per side. The ventilator should be mounted to the mounting angle iron frame with self-tapping sheet metal screws (3 per side).
3. **Wood Sidings:** Around the wall opening, install a wooden frame 2” high x 2” wide. Frame should be approximately 1/2” smaller than the inside base dimension of the ventilator. Secure with counter-sunk expansion type lag bolts (3 per side). The ventilator should then be mounted to the mounting frame with square head wood screws (3 per side) 3/8” minimum.
4. Steel wall mount brackets are also available as a factory option for the fan.
5. The mounting flange connections should be coated with a suitable caulking compound or an approved waterproof mastic sealer.
6. Wall mount application is not recommended for fans greater than 24” wheel with 2 HP motor (1 or 3 phase); 24” wheel with 3 HP motor (3 phase only).

IMPORTANT: OSHA REGULATIONS REQUIRE THE VENTILATOR TO BE MOUNTED AT LEAST EIGHT (8) FEET ABOVE GROUND OR FLOOR LEVEL.

Curb and Ductwork

This fan was specified for a specific CFM and static pressure. The ductwork attached to this unit will significantly affect airflow performance. Flexible ductwork and square elbows should not be used. Also, transitions and turns in ductwork near the fan inlet will cause system effect and will drastically increase the static pressure and reduce airflow. **Follow SMACNA guides and recommendations for the remaining duct run.** Fans designed for rooftop installation should be installed on a prefabricated or factory-built roof curb. Follow curb manufacturer's instructions for proper curb installation.

An example of a curb installation: Curbs should be secured to structural members, such as wooden studs, steel studs, or concrete. The curb should be installed to the roof and/or wall using appropriate type and size fasteners. Refer to **Table 1** for minimum hardware requirements, refer to **Table 2** for quantity per curb flange. Always use suitable fasteners (not furnished) and quantity recommendations.

Refer to **Figure 2** and **Figure 3** for installation details. The fan should be installed on a curb and/or rail. Caulking, flashing and sealing of wall/roof penetration done by contractor or installer.

Verify that the duct connection and fan inlet are properly aligned and sealed. The fan base is secured to the curb with 1/4"-14 x 2" galvanized self-drilling screws. Use a minimum of 12 screws (3 per side) for units with base sizes 19" through 40". Use a minimum of 16 screws (4 per side) for units with a base size of 44". Shims may be required depending upon curb installation and wall/roofing material. Check all fasteners for tightness.

Figure 2 - Curb Mount Details

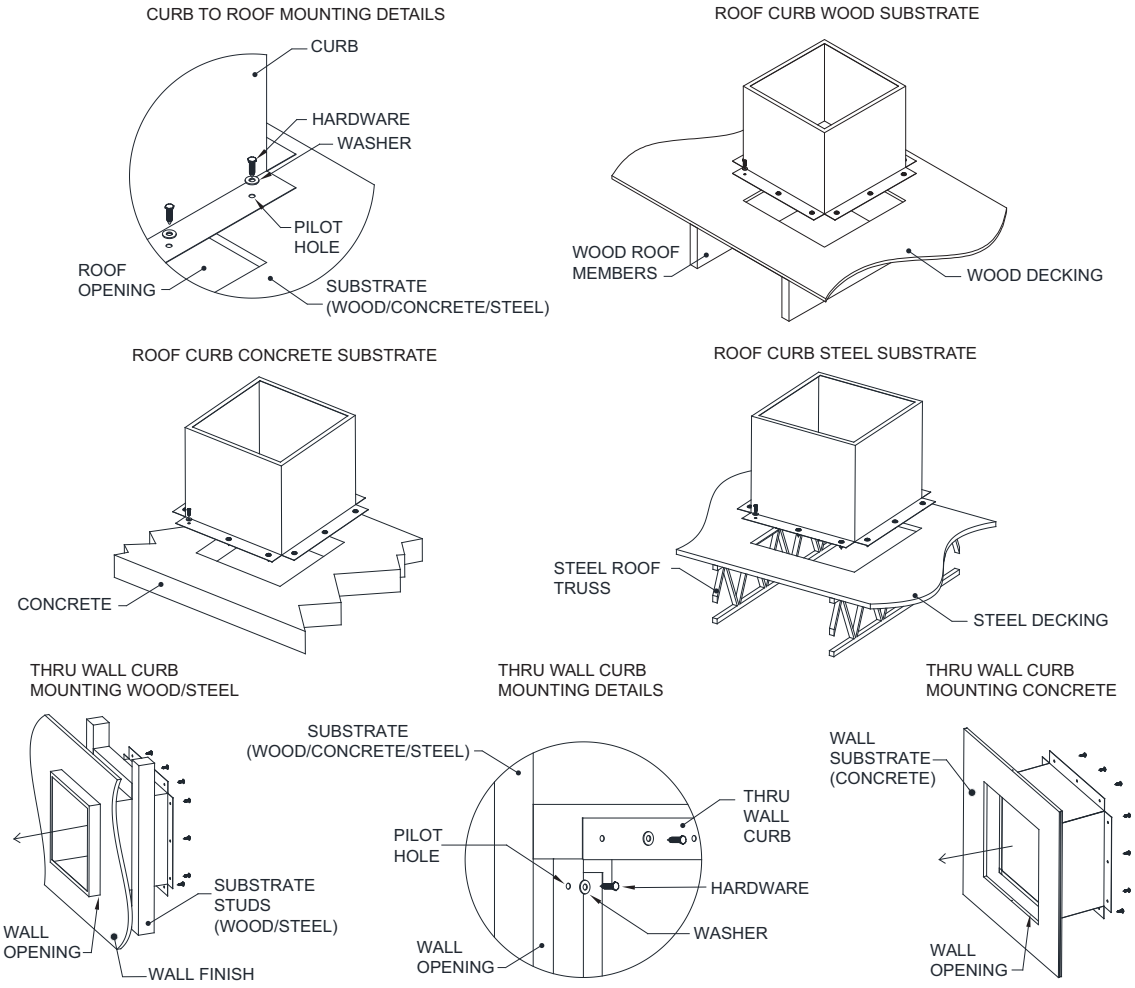

Figure 3 - Minimum Edge Distance and Penetration Details

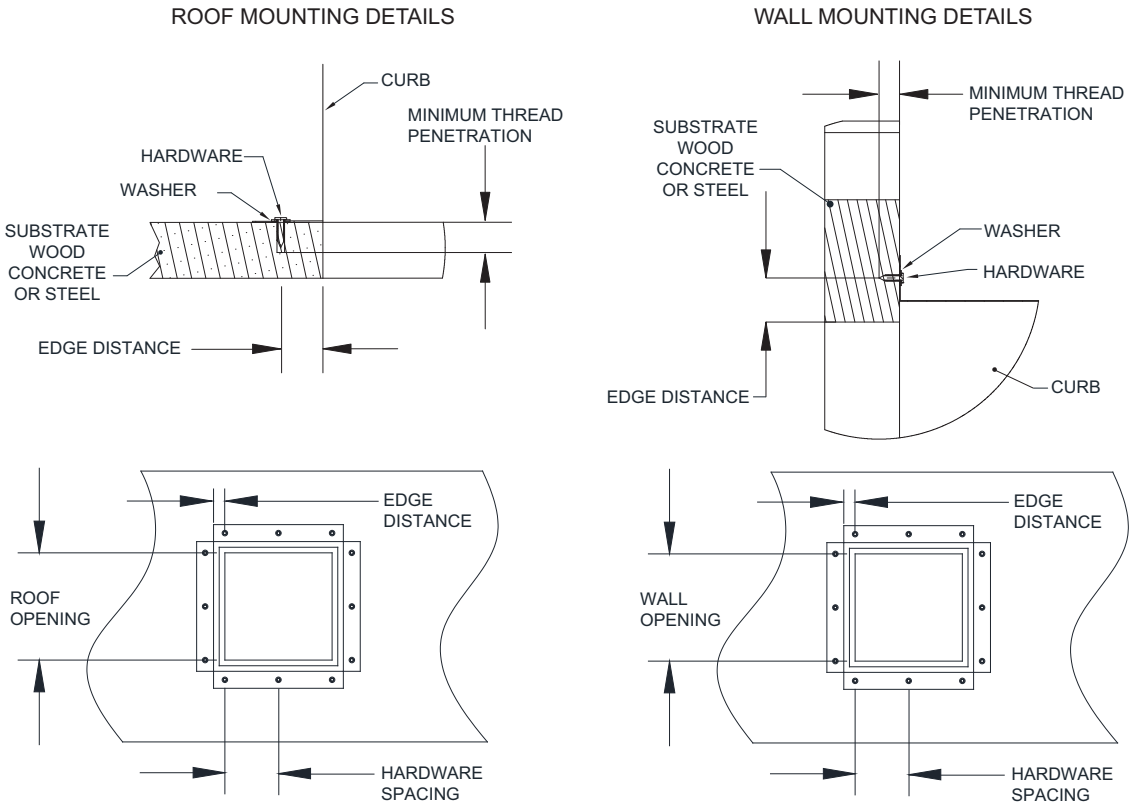

Table 1 - Minimum Hardware Requirements

Material	Minimum Hardware Specifications	Minimum Thread Penetration	Minimum Edge Distance
Wood - Minimum G.42	Zinc Plated Steel Hex Head Lag Screw 3/8" x 2-1/2" with 3/8" washer	2"	1-1/2"
Concrete - 2500 Minimum PSI	Hilti Kwik Bolt 3/8" Diameter TZ Expansion Anchor with 3/8" washer	2-5/16"	3"
Steel (Studs/Roof Truss)	Dril-Flex Self-Drilling Screws 1/4"-14 Min. 1/2" Through with 1/4" washer	12 Gauge or 1/8" Thick	3/8"

Table 2 - Curb to Deck Minimum Fastener Quantity

Fan Base Size	Hardware Quantity Wood	Hardware Quantity Concrete	Hardware Quantity Steel
19"	12 (3 per side)	12 (3 per side)	12 (3 per side)
21"	12 (3 per side)	12 (3 per side)	16 (4 per side)
24-3/4"	16 (4 per side)	16 (4 per side)	20 (5 per side)
26"	20 (5 per side)	20 (5 per side)	24 (6 per side)
28"	20 (5 per side)	20 (5 per side)	24 (6 per side)
33"	24 (6 per side)	24 (6 per side)	28 (7 per side)
40"	28 (7 per side)	28 (7 per side)	36 (8 per side)
44"	40 (10 per side)	36 (9 per side)	44 (11 per side)

NOTE: Fan to Curb Installation: Use 1/4"-14 x 2" self-drilling screws. Use a minimum of 12 screws (3 per side) for 19" through 40" fan bases. Use a minimum of 16 screws (4 per side) for 44" fan bases.

Duct Routing

Figure 4 - Examples of Duct Routing

Proper Duct Routing

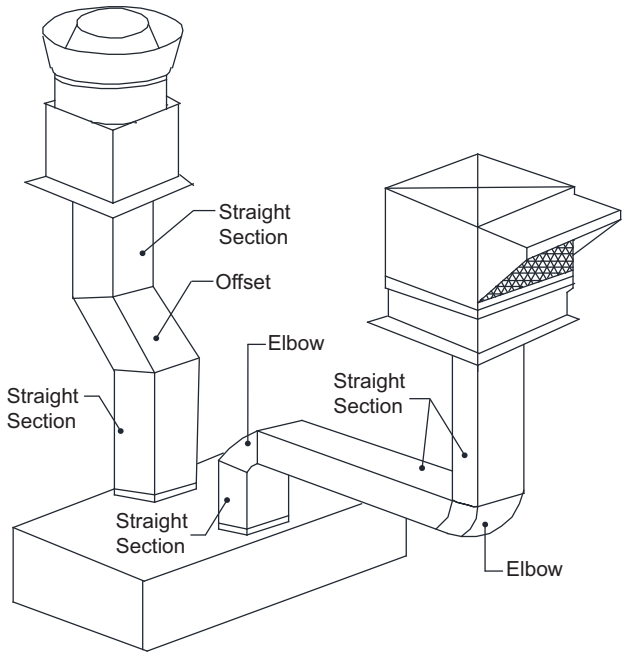

Use offsets if the duct cannot be routed straight up.

Improper Duct Routing

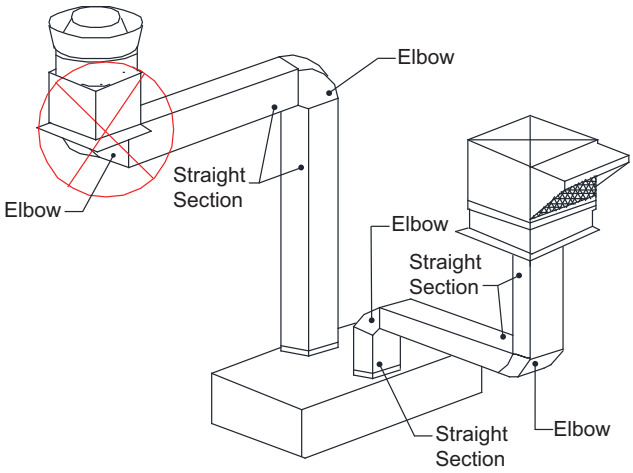

DO NOT connect elbow directly to fan inlet.

Improper Duct Routing

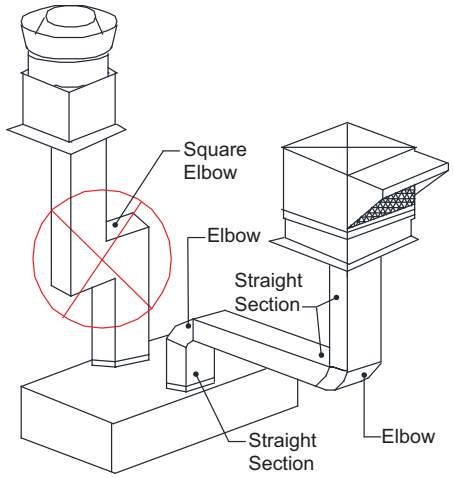

DO NOT use square elbows.

Up-blast Wall Mount Details

Drill pilot holes into the bracket.

Secure wall mount bracket to the wall. Refer to **Table 1** for hardware details.

Use at least (3) suitable fasteners (not furnished) per side.

Wall bracket fits into base of fan.

Use self-drilling screws to attach unit to the wall mount bracket.

* “B” dimension = 5” when used with damper.

** Centered in wall mount.

Figure 5 - Wall Mount Bracket

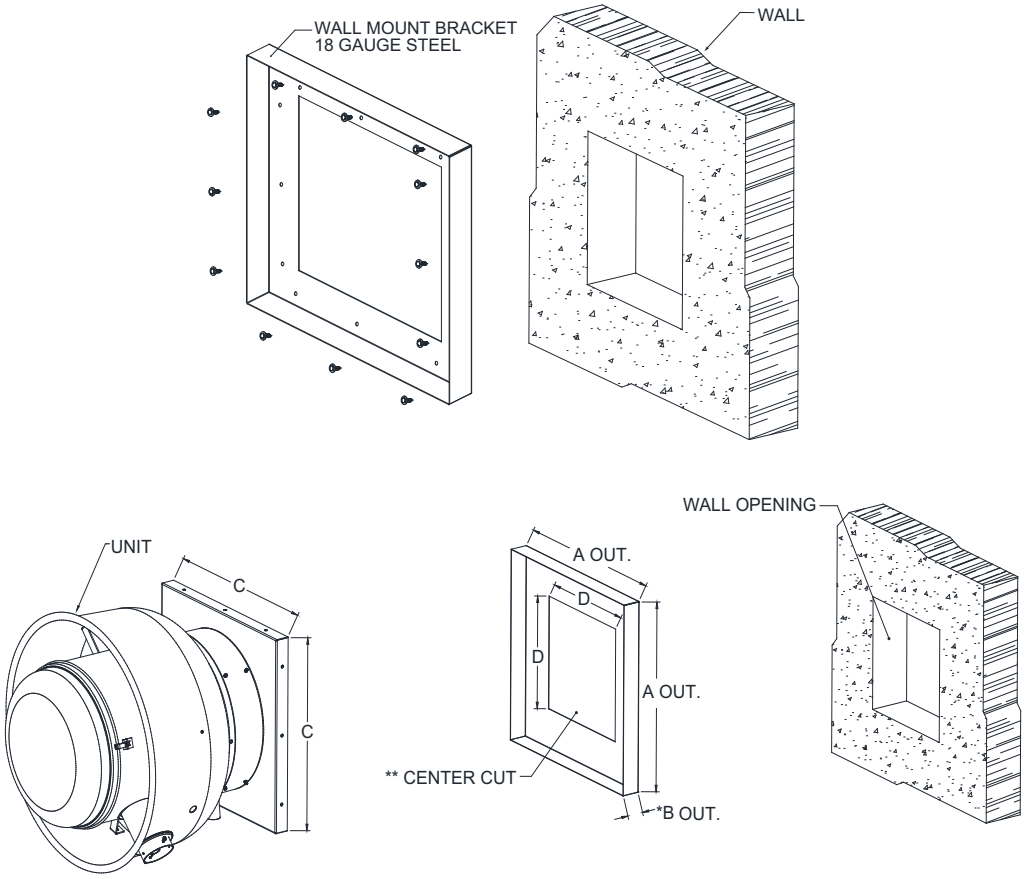

A Outer	B Outer	C	D
18-1/2”	2”	19”	13”
20-1/2”	2”	21”	16”
21-1/2”	2”	22”	16”
24-1/4”	2”	24-3/4”	20”
25-1/2”	2”	26”	20”
27-1/2”	2”	28”	24”
32-1/2”	2”	33”	28”

Up-blast Through Wall Mount Details

Standard curb fits into base of fan.

Refer to **"Curb and Ductwork" on page 6** for curb installation details.

Use self-drilling screws when attaching unit to curb.

Flashing and sealing of wall penetration done by contractor or installer.

For use with fans up to: 24" Wheel 2 HP - 1 Phase Maximum; 24" Wheel 3 HP - 3 Phase Maximum

Figure 6 - Through Wall Mount Details

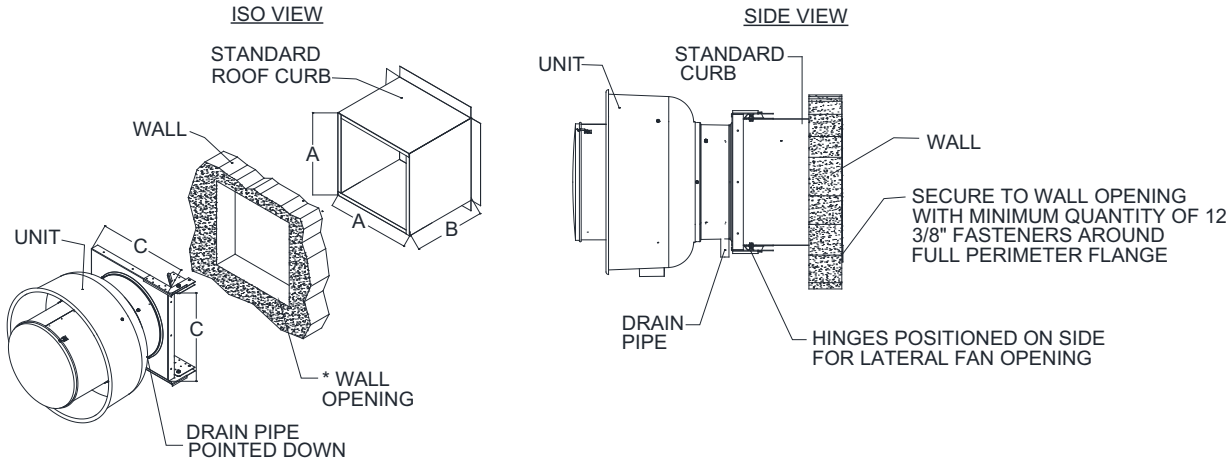

*Contractor or installer must flash wall to curb.

A Dimension	B Dimension	C Dimension
19-1/2"	22"	21"
19-1/2"	20"	21"
23"	20"	24-3/4"
26-1/6	20"	28"
26-1/2"	20"	28"
31-1/2"	20"	33"

Up-blast Roof Mount Installation

Normal temperature test – The exhaust fan must operate continuously while exhausting air at 300°F (149°C) until all fan parts have reached thermal equilibrium, and without any deteriorating effects to the fan which would cause unsafe operation.

Abnormal flare-up test – The exhaust fan must operate continuously while exhausting burning grease vapors at 600°F (316°C) for a period of 15 minutes without the fan becoming damaged to any extent that could cause an unsafe condition.

Pitched curbs are available. Specify pitch when ordering, for example: 7/12 Pitch = 30° Slope

Figure 7 - Up-blast Roof Mount Details

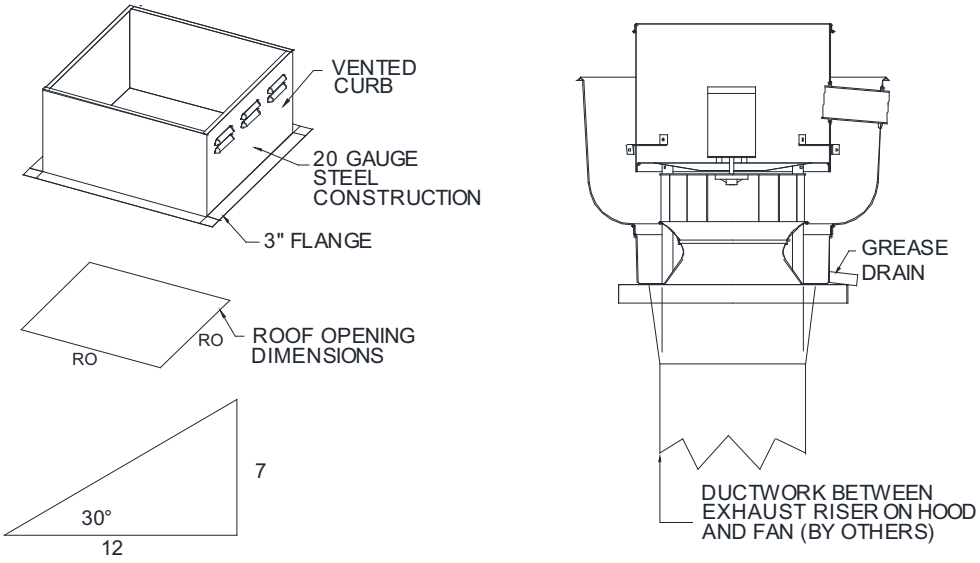

Down-blast Installation

Pitched curbs are available. Specify pitch when ordering, for example: 7/12 Pitch = 30° Slope

Figure 8 - Down-Blast Details

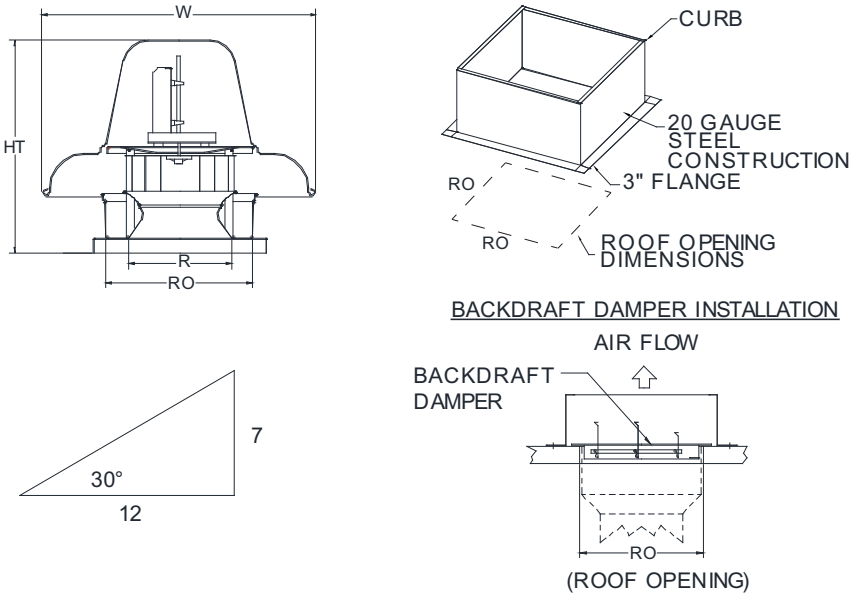

Typical Hinge Kit - Centrifugal Up-blast

Hinge Kit Field Installation

Attention: Installer Must Supply Enough Electrical Cord to Allow the Fan to Swing Open.

1. If parts are not already assembled, refer to **Figure 9** for assembly instructions. Assemble the fan plate and curb plate with hardware, as shown in **Figure 9** Detail “A” and Detail “B”.
2. Line up fan base edge to inside edge of fan plate, as shown in **Figure 9** Detail “C”. Refer to **Figure 10** for positioning fan plate on fan base.
3. Secure the fan plate to the fan base using sheet metal screws (#14 x 3/4” – qty 12). **If the screws interfere with the curb, run the screws from the inside of the fan base**. **Refer to Figure 9 Detail “D”. Verify hardware does not interfere with curb when fan swings open or closed.**
4. Secure the curb plate to the curb using sheet metal screws (#14 x 3/4” – qty 12), **Figure 9** Detail “C”. Verify all parts and hardware are secure and tight. Verify that the fan and base swings open properly, see **Figure 10**.

Parts List

- Left and Right Fan Plates - Quantity 2
- Left and Right Curb Plates - Quantity 2
- Whiz Nuts - Quantity 6
- Whiz Bolts - Quantity 2
- Sheet Metal Screws (#14 x 3/4”) - Quantity 24

Figure 9 - Typical Hinge Kit Fan Plate and Curb Plate Details

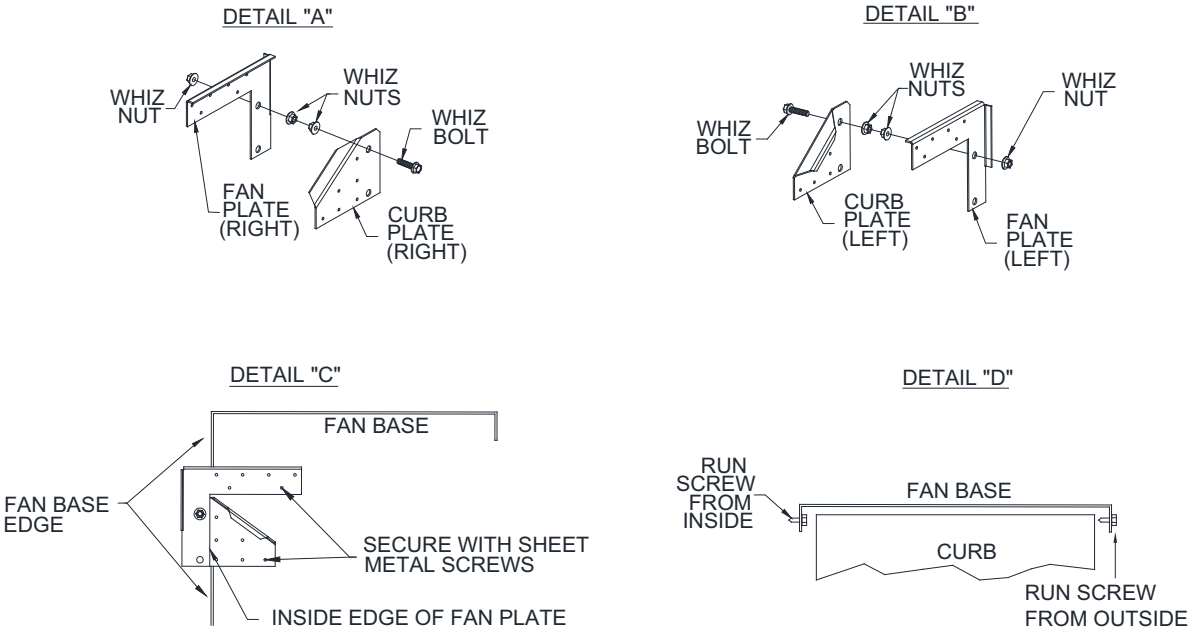

Attention! Installer Must Supply Enough Electrical Cord to Allow the Fan to Swing Open.

Figure 10 - Centrifugal Up-blast Hinge Kit Installation Details

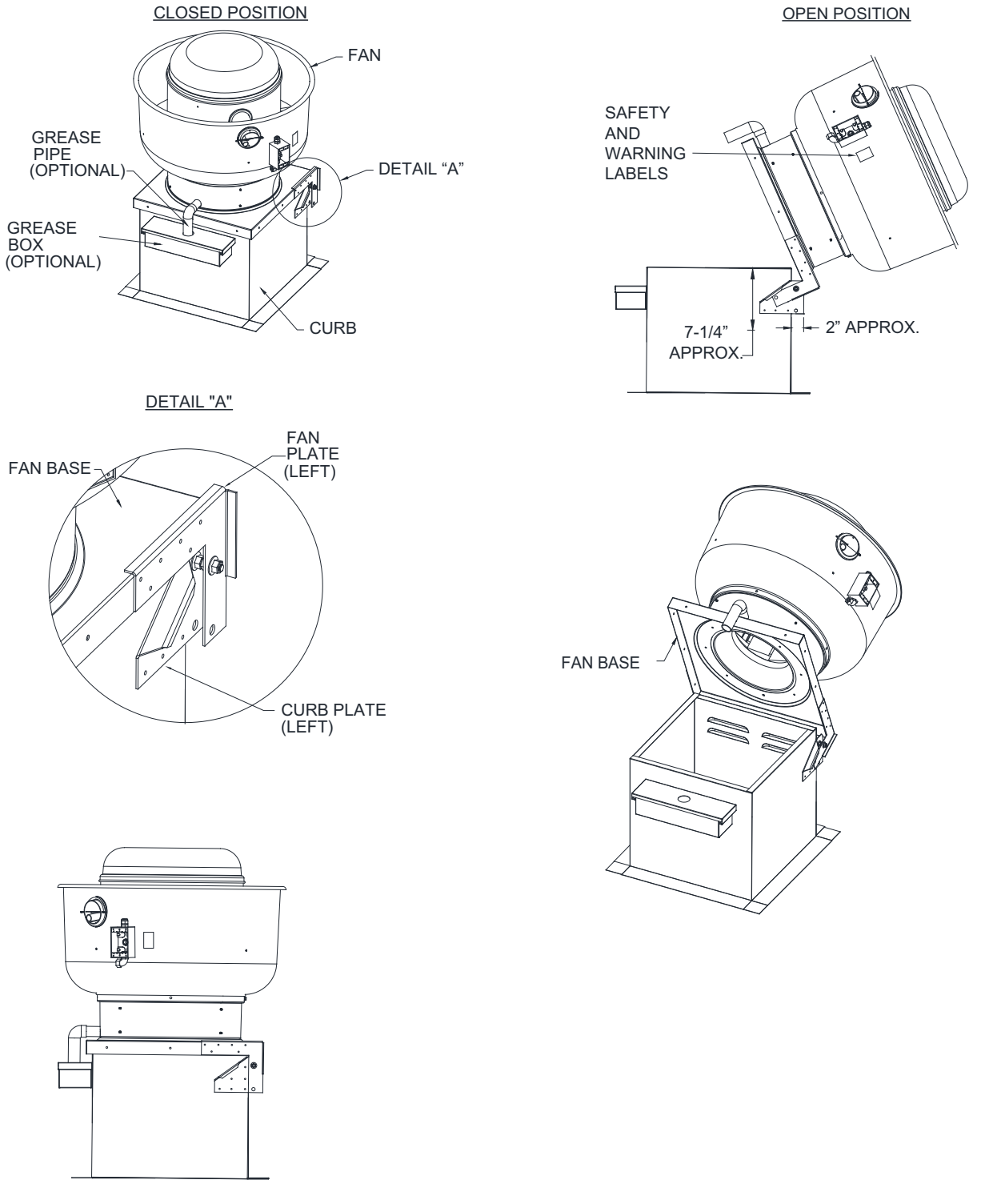

Heavy Duty (HD) Hinge Kit Installation

Hinge Kit Field Installation

Attention: Installer Must Supply Enough Electrical Cord to Allow the Fan to Swing Open.

1. If parts are not already assembled, refer to **Figure 11** for assembly instructions. Assemble the fan plate and curb plate with hardware, as shown in **Figure 11** Detail “A” and Detail “B”.
2. Secure the hinge backplate to the curb with provided hardware, refer to **Figure 12** Detail “B”.
3. Line up fan base edge to inside edge of fan plate, as shown in **Figure 11** Detail “C”. Refer to **Figure 12** detail “A” for positioning fan plate on fan base.
4. Secure the fan plate to the fan base using provided hardware (1/4”-20 – qty 11). **If the screws interfere with the curb, run the screws from the inside of the fan base**. **Refer to Figure 11 Detail “D”. Verify hardware does not interfere with curb when fan swings open or closed.**
5. Secure the curb plate to the curb using provided hardware (1/4”-20 – qty 9), **Figure 11** Detail “C”. Verify all parts and hardware are secure and tight. Verify that the fan and base swings open properly, see **Figure 12**.

Parts List

- Left and Right Fan Plates - Quantity 2
- Left and Right Curb Plates - Quantity 2
- 3/8”-16 Whiz Nuts - Quantity 6
- 3/8”-16 Whiz Bolts - Quantity 2
- 1/4”-20 Whiz Bolts - Quantity 20
- 1/4”-20 Whiz Bolts - Quantity 20

Figure 11 - HD Hinge Kit Fan Plate and Curb Plate Details

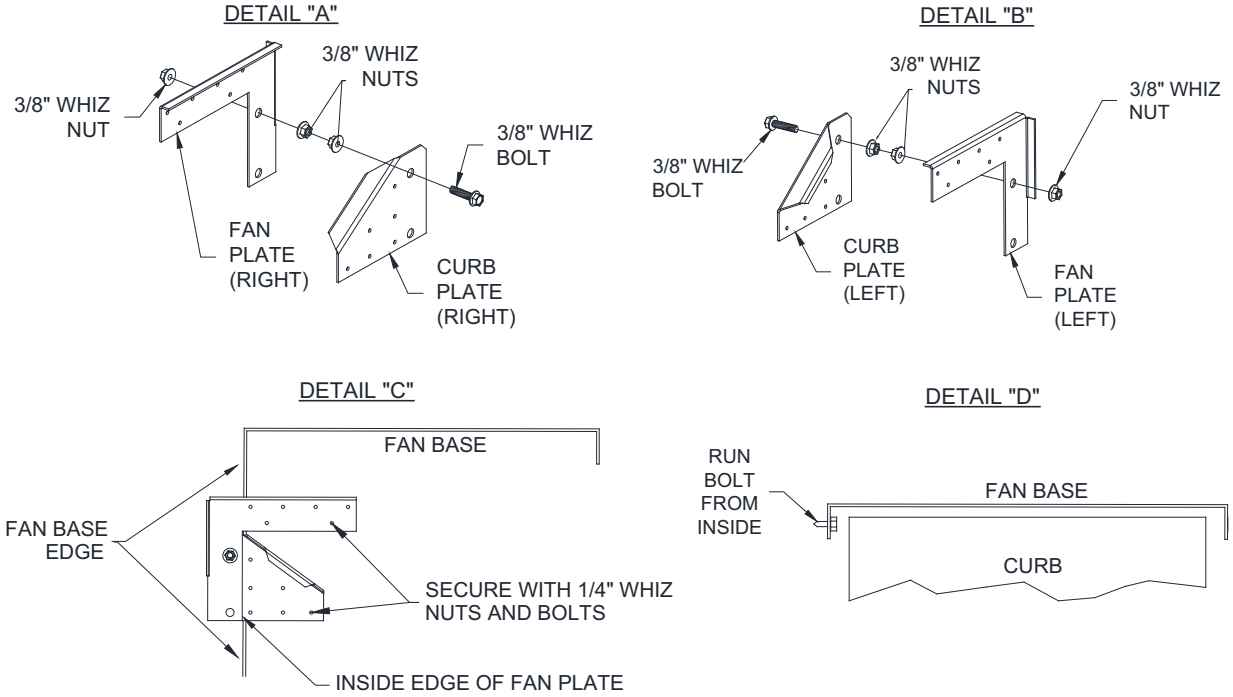

Attention! Installer Must Supply Enough Electrical Cord to Allow the Fan to Swing Open.

Figure 12 - Heavy Duty (HD) Hinge Kit Installation Details

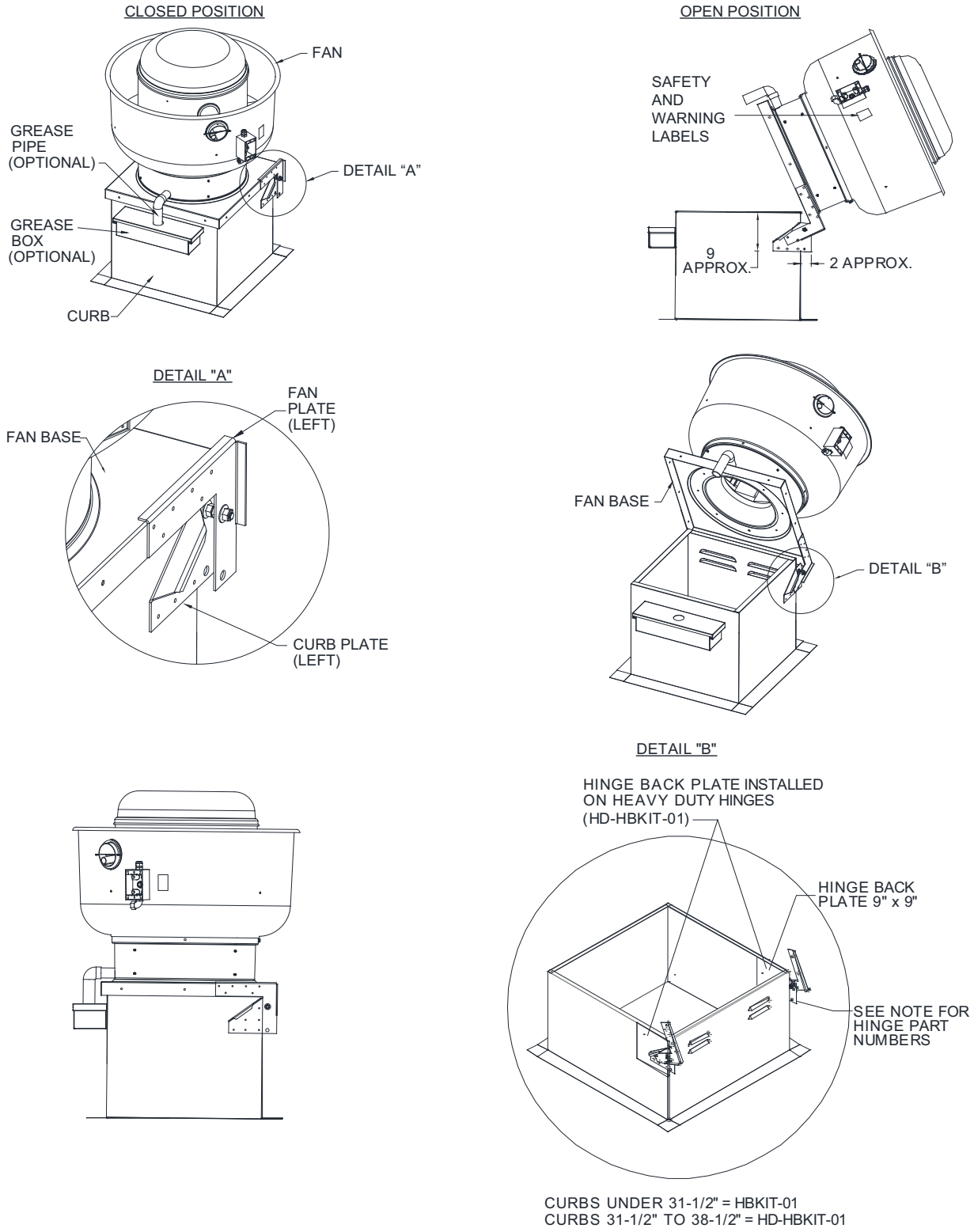

Heavy Duty (HD) Locking Hinge Kit Installation

Hinge Kit Field Installation

Attention: Installer Must Supply Enough Electrical Cord to Allow the Fan to Swing Open.

1. If parts are not already assembled, refer to **Figure 13** for assembly instructions. Assemble the fan plate and curb plate with hardware, as shown in **Figure 13** Detail “A” and Detail “B”.
2. Secure the hinge backplate to the curb with provided hardware, refer to **Figure 14** Detail “B”.
3. Line up fan base edge to inside edge of fan plate, as shown in **Figure 13** Detail “C”. Refer to **Figure 14** detail “A” for positioning fan plate on fan base.
4. Secure the fan plate to the fan base using provided hardware (1/4”-20 – qty 11). **If the screws interfere with the curb, run the screws from the inside of the fan base**. **Refer to Figure 13 Detail “D”. Verify hardware does not interfere with curb when fan swings open or closed.**
5. Secure the curb plate to the curb using provided hardware (1/4”-20 – qty 11), **Figure 13** Detail “C”. Verify all parts and hardware are secure and tight. Verify that the fan and base swings open properly, see **Figure 14**.

Parts List

- Left and Right Fan Plates - Quantity 2
- Left and Right Curb Plates - Quantity 2
- 3/8”-16 Whiz Nuts - Quantity 6
- 3/8”-16 Whiz Bolts - Quantity 2
- 1/4”-20 Whiz Bolts - Quantity 22
- 1/4”-20 Whiz Bolts - Quantity 22

Figure 13 - HD Locking Hinge Kit Fan Plate and Curb Plate Details

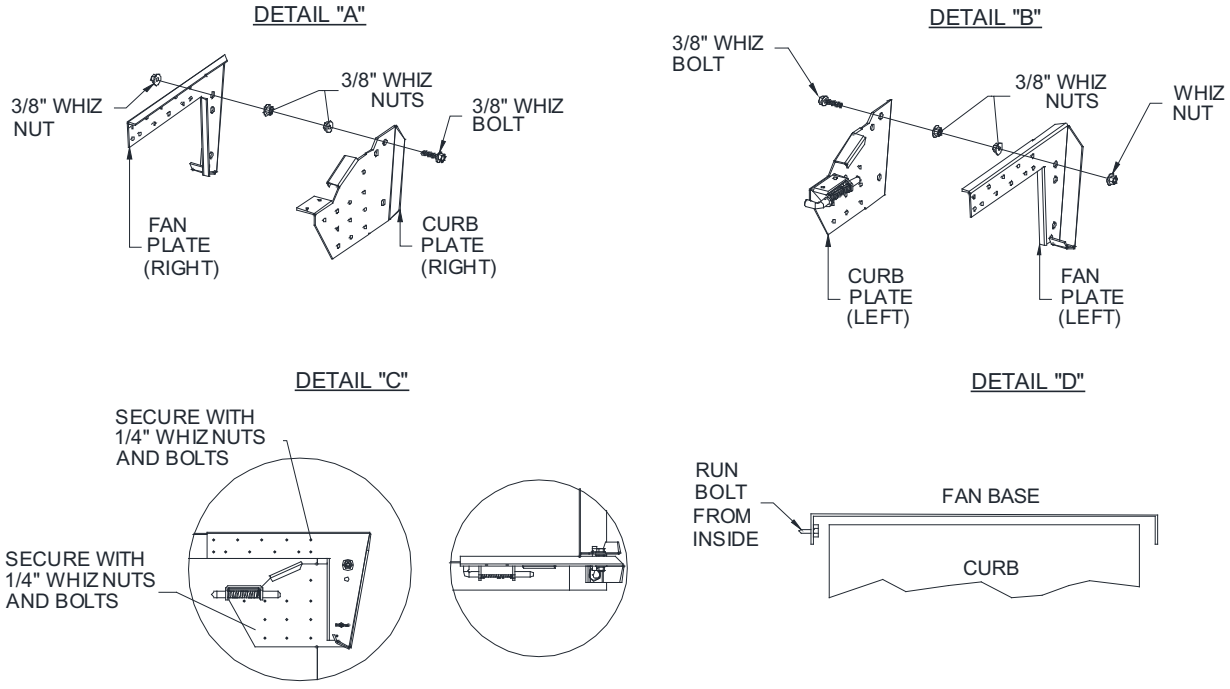

Attention! Installer Must Supply Enough Electrical Cord to Allow the Fan to Swing Open.

Figure 14 - Heavy Duty (HD) Locking Hinge Kit Installation Details

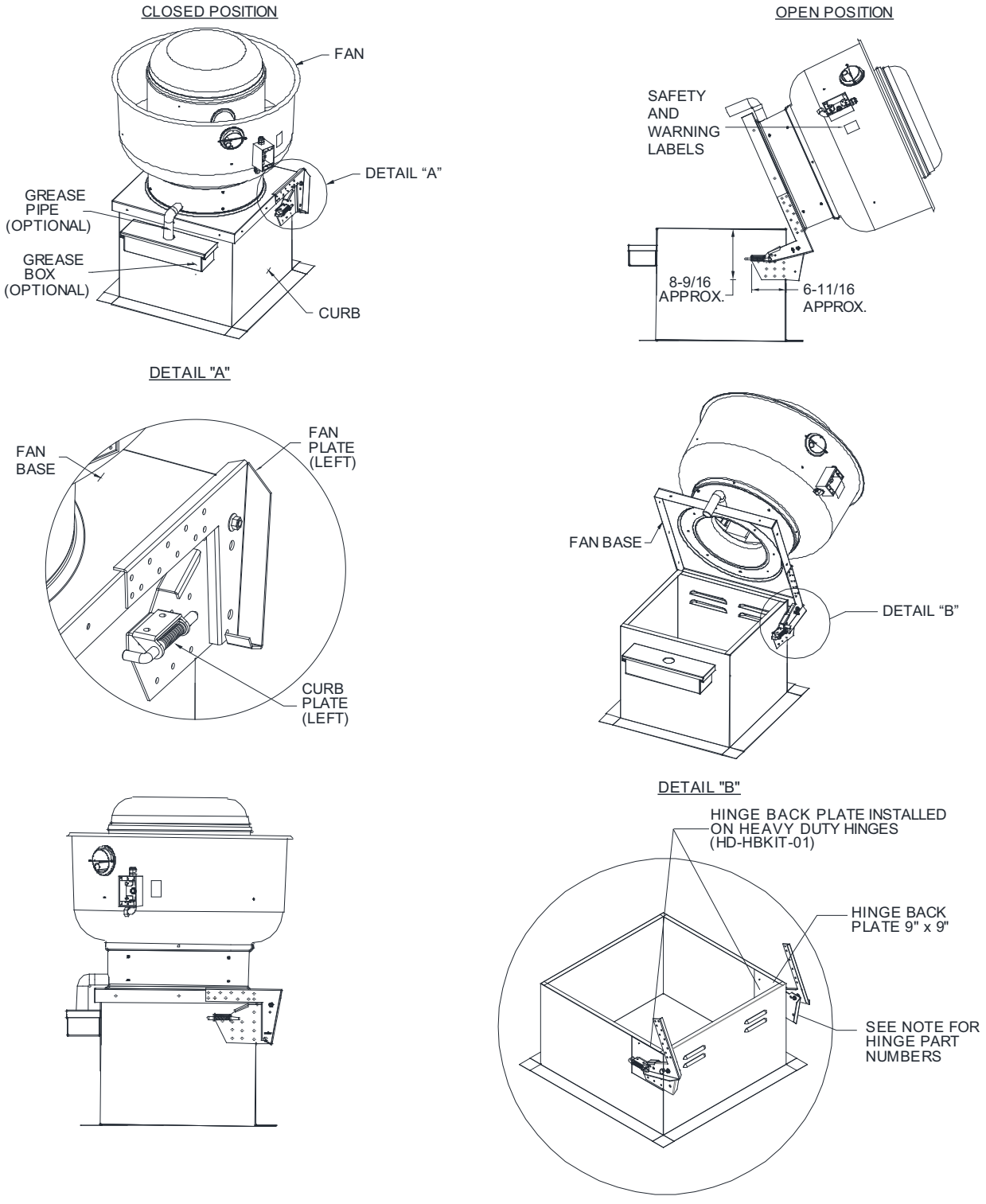

Typical Grease Box Installation

Grease Box Field Installation

1. Mark a mounting location 3” from the top of the curb for the grease box cover. Refer to **Figure 15** Detail “A”.
2. Secure grease box cover to the curb using provided sheet metal screws (qty 3). Refer to **Figure 15** Detail “B”.
3. Slide the grease box into the grease box cover lip. Refer to **Figure 15** Detail “C”.
4. Install grease pipe into grease box cover. Refer to **Figure 15** Detail “D”.

Figure 15 - Typical Grease Box Installation

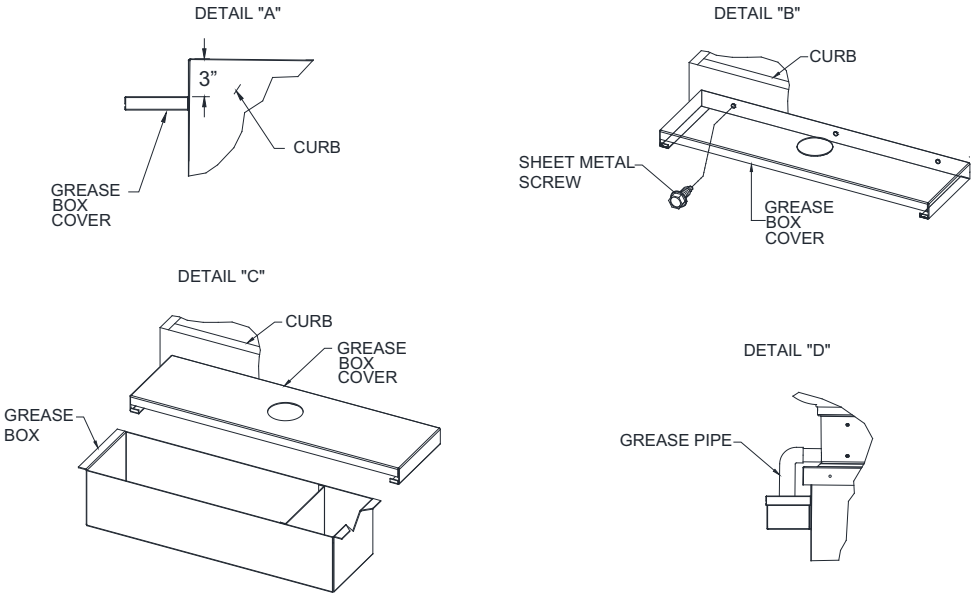

Figure 16 - Grease Box Installed

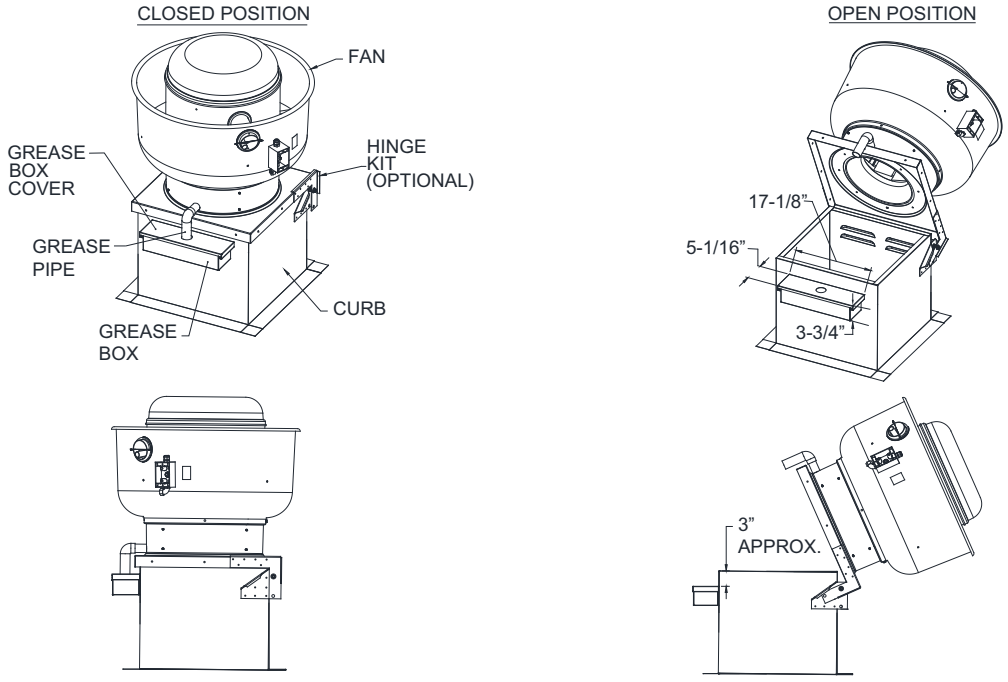

Up-blast Utility Set Installation

Normal temperature test belt drive – The exhaust fan must operate continuously while exhausting air at 350°F (176°C) until all fan parts have reached thermal equilibrium, and without any deteriorating effects to the fan which would cause unsafe operation.

Normal temperature test direct drive – The exhaust fan must operate continuously while exhausting air at 350°F (176°C) until all fan parts have reached thermal equilibrium, and without any deteriorating effects to the fan which would cause unsafe operation.

Direct driveshaft diameter may change due to motor selected Horsepower (HP)/frame size.

Features	Options
Roof Mounted Fans	Grease Box
Restaurant Model	Shaft Seal
UL705 and UL762	Vibration Isolators
High Heat Operation Direct Drive 350°F (176°C)	Extension
High Heat Operation Belt Drive 350°F (176°C)	Inlet Adapters
Heat Slinger	Inlet Riser
Grease Classification Testing	Support Rails
2” Drain	Rain Cap
Motor Weather Cover	
Fully Sealed Scroll Housing	
Scroll Access Door	
Flange 1 = 1/4”-11 through 20”	
Flange 2 = 2”-24 through 36”	

Figure 17 - Up-blast Utility Set Installation

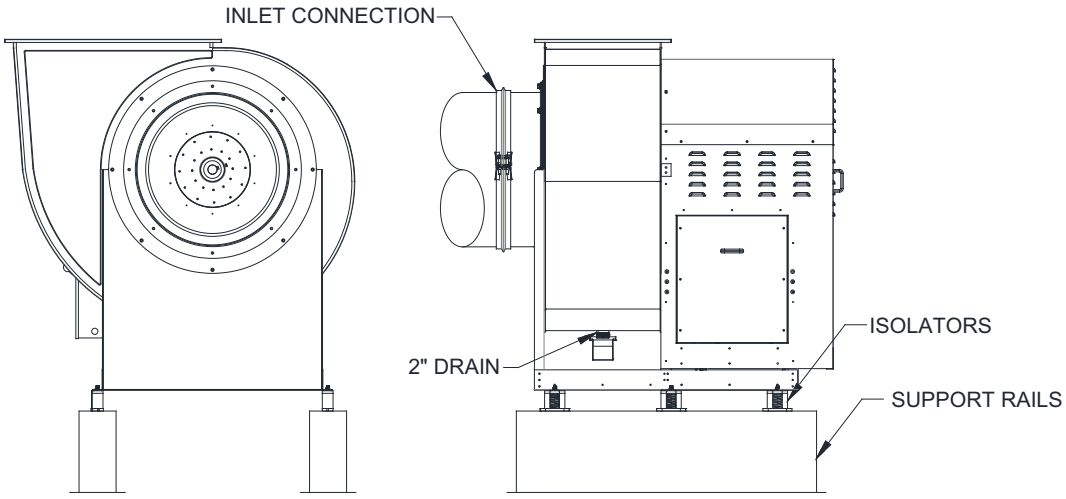

Up-blast Utility Set Inlet Options

Figure 18 - Up-blast Utility Set Inlet Options

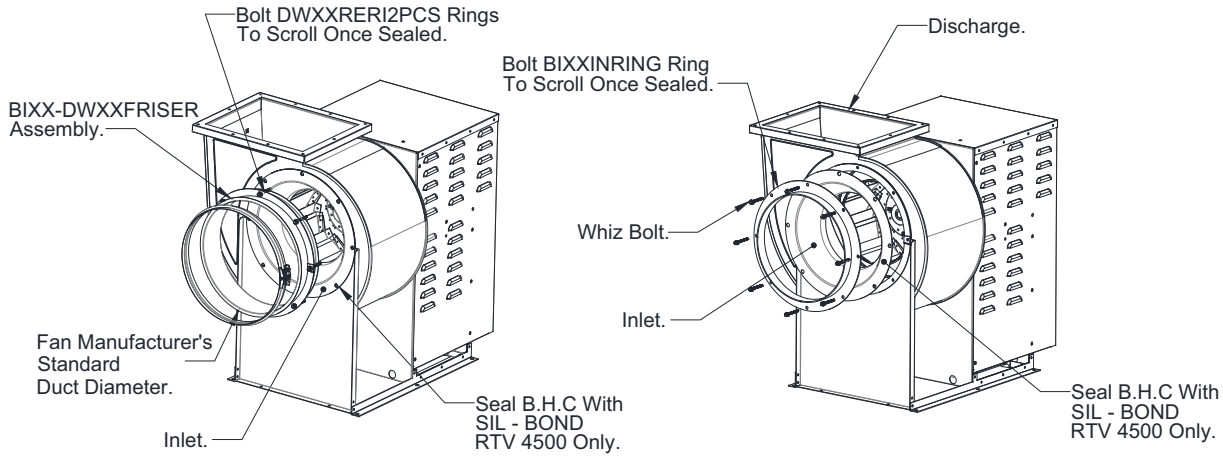

Fan Size	Duct Diameter	Inlet Connection	Inlet Rings	Quantity	Duct Riser	Quantity	Whiz Bolt	Quantity
11	12”	BI11-DW12FRISER	A0028896/ DW12RERI2PCS	2	DW12RISER	1	A0005696/ 1/4”-20 x 1-1/2”	8
13	14”	BI13-DW14FRISER	A0028897/ DW14RERI2PCS	2	DW14RISER	1	A0005696/ 1/4”-20 x 1-1/2”	8
15	16”	BI15-DW16FRISER	A0028898/ DW16RERI2PCS	2	DW16RISER	1	A0005696/ 1/4”-20 x 1-1/2”	8
18	20”	BI18-DW20FRISER	A0028900/ DW20RERI2PCS	2	DW20RISER	1	A0005696/ 1/4”-20 x 1-1/2”	8
20	20”	BI20-DW20FRISER	A0028901/ DW20RERIUSBI202PCS	2	DW20RISER	1	A0005696/ 1/4”-20 x 1-1/2”	8
24	24”	BI24-DW24FRISER	A0028904/ DW24RERIUSBI242PCS	2	DW24RISER	1	A0005678/ 3/8”-16 x 1-1/2”	8
30	24”	BI30-DW24FRISER	A0028905/ DW24RERIUSBI302PCS	2	DW24RISER	1	A0005678/ 3/8”-16 x 1-1/2”	8
36	30”	BI36-DW30FRISER	A0030879/ DW30RERIUSBI362PCS	2	DW30RISER	1	A0005678/ 3/8”-16 x 1-1/2”	8
11	12”	A0023766/BI11INRING	N/A		N/A		A0005696/ 1/4”-20 x 1-1/2”	8
13	14”	A0023767/BI13INRING	N/A		N/A		A0005696/ 1/4”-20 x 1-1/2”	8
15	16”	A0023768/BI15INRING	N/A		N/A		A0005696/ 1/4”-20 x 1-1/2”	8
18	20”	A0023769/BI18INRING	N/A		N/A		A0005696/ 1/4”-20 x 1-1/2”	8
20	20”	A0023770/BI20INRING	N/A		N/A		A0005696/ 1/4”-20 x 1-1/2”	8
24	24”	A0023771/BI24INRING	N/A		N/A		A0005678/ 3/8”-16 x 1-1/2”	8
30	24”	A0023772/BI30INRING	N/A		N/A		A0005678/ 3/8”-16 x 1-1/2”	8
36	30”	A0023773/BI36INRING	N/A		N/A		A0005678/ 3/8”-16 x 1-1/2”	8

Inlet Service Duct Option

Service duct kits allow a quick disconnect between the fan inlet and duct system.

1. Service duct kits come with (2) 7” long duct sections, (8) riser rings, and installation hardware.
2. Service duct flanges must be sealed with 3M Barrier 2000+.
3. Once sealed, the service duct is secured using bolt together riser rings.
4. The first 7” long duct section can be welded directly to existing duct systems.
5. If connecting to fan Manufacturer’s factory duct, the first 7” long duct section may or may not be used. You may connect fan Manufacturer’s standard duct directly to service duct using V-bands.

Figure 19 - Inlet Service Duct Option

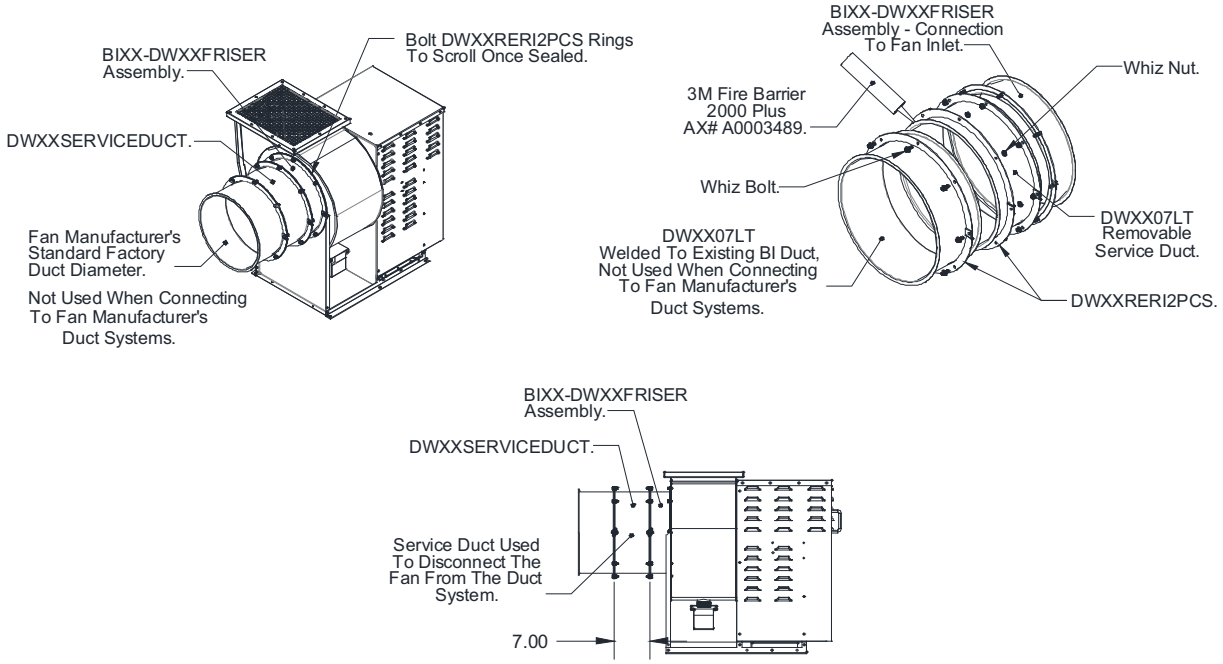

Fan Size	Duct Diameter	Inlet Connection Assembly	Duct LT	Quantity	Riser Rings	Quantity	Whiz Bolt (Inches)	Quantity	Whiz Nut (Inches)	Quantity
11	12”	12SERVICEDUCTKIT	DW1207LT	2	A0028896/ DW12RERI2PCS	8	A0023684/ 1/4”-20 x 1”	16	A005690/ 1/4”-20	16
13	14”	14SERVICEDUCTKIT	DW1407LT	2	A0028897/ DW14RERI2PCS	8	A0023684/ 1/4”-20 x 1”	16	A005690/ 1/4”-20	16
15	16”	16SERVICEDUCTKIT	DW1607LT	2	A0028898/ DW16RERI2PCS	8	A0023684/ 1/4”-20 x 1”	16	A005690/ 1/4”-20	16
18	20”	20SERVICEDUCTKIT	DW2007LT	2	A0028900/ DW20RERI2PCS	8	A0023684/ 1/4”-20 x 1”	16	A005690/ 1/4”-20	16
20	20”	20SERVICEDUCTKIT	DW2007LT	2	A0028900/ DW20RERI2PCS	8	A0023684/ 1/4”-20 x 1”	16	A005690/ 1/4”-20	16
24	24”	24SERVICEDUCTKIT	DW2407LT	2	A0028903/ DW24RERI2PCS	8	A0023684/ 1/4”-20 x 1”	16	A005690/ 1/4”-20	16
30	24”	24SERVICEDUCTKIT	DW2407LT	2	A0028903/ DW24RERI2PCS	8	A0023684/ 1/4”-20 x 1”	16	A005690/ 1/4”-20	16
36	30”	30SERVICEDUCTKIT	DW3007LT	2	A0030878/ DW36RERI2PCS	8	A0024297/ 3/8”-16 x 1”	16	A005688/ 3/8”-16	16

Up-blast Utility Set

Figure 20 - Discharge Extension Options

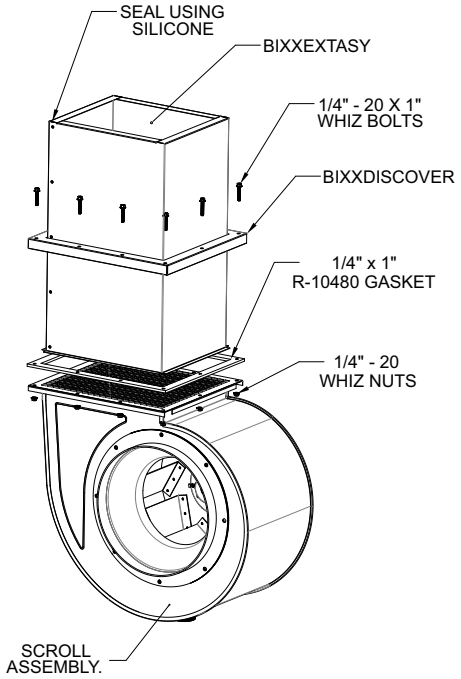

Hardware Counts	
Hardware # Bolt/Nut	**Hardware Quantity**
1/4”-20 x 1” (92323A518)/1/4”-20 (94831A029)	8
1/4”-20 x 1” (92323A518)/1/4”-20 (94831A029)	8
1/4”-20 x 1” (92323A518)/1/4”-20 (94831A029)	8
1/4”-20 x 1” (92323A518)/1/4”-20 (94831A029)	12
1/4”-20 x 1” (92323A518)/1/4”-20 (94831A029)	12
1/4”-20 x 1” (92323A518)/1/4”-20 (94831A029)	12
1/4”-20 x 1” (92323A518)/1/4”-20 (94831A029)	12
1/4”-20 x 1” (92323A518)/1/4”-20 (94831A029)	14

BI - Discharge Extension					
Fan Size	**Extension #**	**L**	**W**	**H**	**Cover #**
11	BI11EXTASY	12”	11”	24”	BI11DISCOVER
13	BI13EXTASY	14”	12”	24”	BI13DISCOVER
15	BI15EXTASY	16”	13”	24”	BI15DISCOVER
18	BI18EXTASY	19”	15”	24”	BI18DISCOVER
20	BI20EXTASY	21”	15”	24”	BI20DISCOVER
24	BI24EXTASY	26”	17”	24”	BI24DISCOVER
30	BI30EXTASY	32”	19”	24”	BI30DISCOVER
36	BI36EXTASY	39”	23”	24”	BI26DISCOVER

Up-blast Utility Set Indoor Installation

Some situations prevent the installation of exhaust fans on the roof or other outdoor location. An indoor installation may be the only alternative.

Of the various types of fans that might be employed, utility sets seem most appropriate because they readily accommodate the inlet and outlet duct connections. Fans designed for curb mounting would present outlet duct connection difficulties.

Most Authority Having Jurisdictions (AHJs) comply with IMC, NFPA 96 and UL 762 standards. Standard UL 762, “Power Roof Ventilators for Restaurant Exhaust Appliances”, covers the utility set high temperature and grease fire testing. NFPA 96 “Standard for Ventilation Control and Fire Protection of Commercial Cooking Operations” covers the installation of the duct connections to the inlet and out of the exhaust fan.

Standard UL 762:

This standard has two primary tests. The first test has the fan exhaust air for several hours at the maximum temperature the manufacturer wishes to list the fan, such as 300°F. The second part imitates a grease fire by igniting grease in a pan near an inlet duct. If the fan keeps running and does not display any unsafe results, it passes those tests. They also examine the fan for any characteristics that might be unsuitable.

In the scope of section 1.1, it states “these requirements cover roof or wall-mounted ventilators for restaurant exhaust appliances.” It would seem at first that the phrase “roof or wall mounted” would preclude applicability of the label indoors. However, in the very next paragraph it goes on to say, “Power ventilators…covered by these requirements are intended for installation in accordance with … NFPA 96”. NFPA 96 clearly defines how to install a traditional ventilator indoors.

Standard NFPA 96 – 8.1.4* Utility Set Exhaust Fans.

8.1.4.2 Utility set exhaust fans installed within the building shall be located in an accessible area of adequate size to allow for service or removal.

8.1.4.3 Where the duct system connected to the fan is in an enclosure, the space or room in which the exhaust fan is located shall have the same fire resistance rating as the enclosure.

8.1.4.4 The fan shall be connected to the exhaust duct by flanges securely bolted, as shown in Figure 8.1.3.2 (a) through Figure 8.1.3.2 (d) or by a system specifically listed for such use, such as UL 1978 or UL 2221 listed duct systems.

8.1.4.5 Flexible connectors shall not be used.

8.1.4.6 Exhaust fans shall have a drain directed to a readily accessible and visible grease receptacle not to exceed 3.8 L (1 gallon).

Manufacturer Recommendations for Indoor Installation:

1. The fan inlet and outlet must be connected to the ducts using companion flanges and high temperature (1500F) gaskets or by a system specifically listed for such use, such as UL 1978 or UL 2221 listed duct systems.
2. Install the fan where there is room for service and removal.
3. Usually, the duct to the fan is in a shaft, and the shaft walls have a fire resistance rating. The space where the fan is located must have the same fire resistance rating as the shaft.
4. Flexible connectors are not allowed.
5. There must be a drain in the fan that is directed to a readily accessible and visible grease receptacle, ideally piped to the building grease trap.
6. The exhaust housing constructed of carbon steel not less than 1.52 mm (.060 in.), unless listed in accordance with the terms of the listing.
7. Inlet and outlet ducts will have access doors installed 3 feet from the fan for service and maintenance.
8. Minimum clearances are 18” inches to combustible, 3” inches to limited, 0” inches to non-combustibles.
9. All wiring and electrical equipment must comply with NFPA 70, National Electrical Code.

Up-blast Curb Mounted Utility Set Hinging Instructions

1. Turn the disconnect switch to the off position.
2. Turn and release the latch from the power pack handle.
3. Lift the power pack using the front handle.
4. The power pack will tilt back 65 degrees.
5. The power pack latch will automatically engage the spring pin.
6. To close the power pack, hold the lifting handle and pull the spring pin up.
7. Lower the power pack down.
8. Engage the front latch into the lifting handle and twist to lock.
9. Inspect the power pack. Top plate should be sealed with top gasket.
10. Turn the wheel to make sure there is not any interference.

NOTE: Utility sets may not be wall mounted.

Figure 21 - Up-blast Curb Mounted Utility Set Hinge

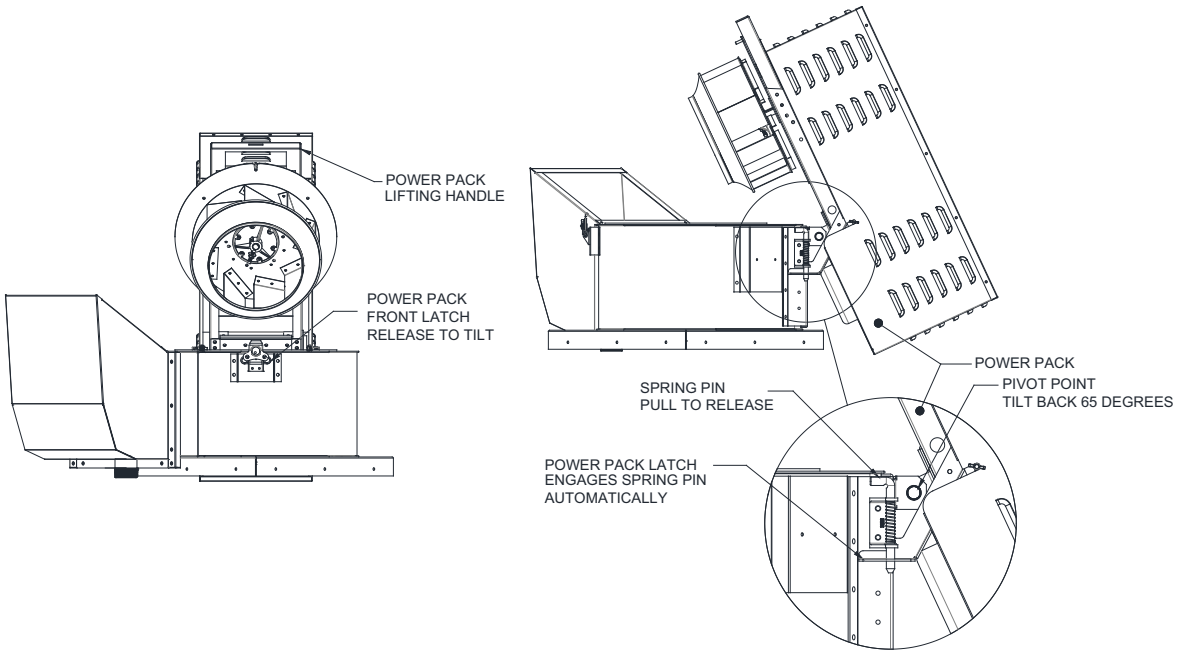

Up-blast Curb Mounted Utility Set Discharge Extension Option

Figure 22 - Discharge Extension Option

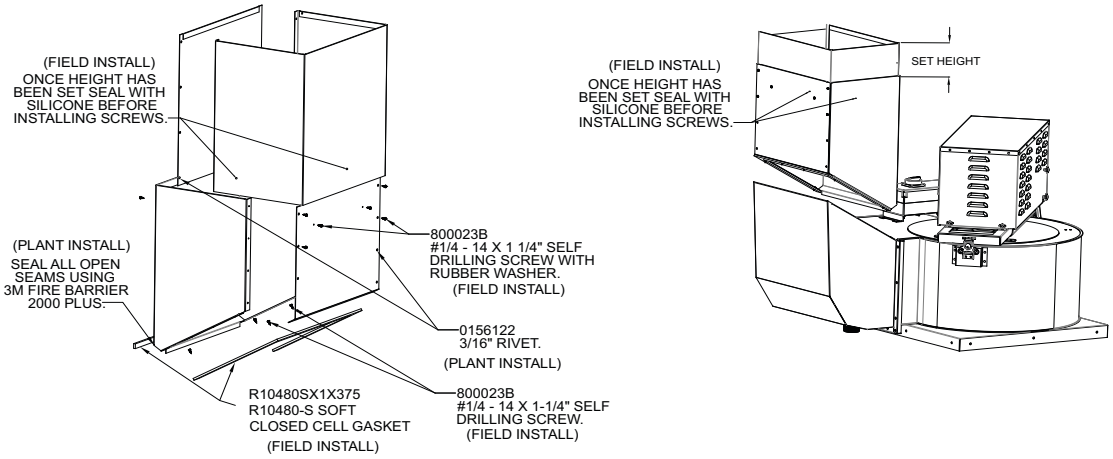

Utility Set Option - Extension Assembly	
Part Number	**Description**
RE13ADJEXTASY	RE13 - Extension Assembly Option
RE15ADJEXTASY	RE15 - Extension Assembly Option
RE18ADJEXTASY	RE18 - Extension Assembly Option
RE20ADJEXTASY	RE20 - Extension Assembly Option
RE24ADJEXTASY	RE24 - Extension Assembly Option

Up-blast Curb Mounted Utility Set Rain Cap Option

Figure 23 - Rain Cap Option

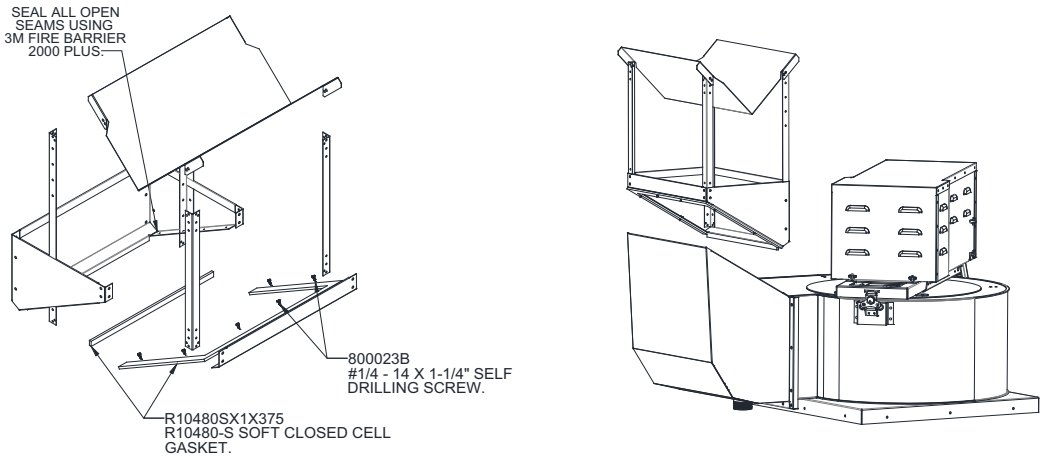

Utility Set Option - Rain Cap Assembly	
Part Number	**Description**
RE11RAINCAP ASSY	RE11 - Extension Assembly Option
RE13RAINCAP ASSY	RE13 - Extension Assembly Option
RE15RAINCAP ASSY	RE15 - Extension Assembly Option
RE18RAINCAP ASSY	RE18 - Extension Assembly Option
RE20RAINCAP ASSY	RE20 - Extension Assembly Option
RE24RAINCAP ASSY	RE24 - Extension Assembly Option

Square Inline Mounting Configurations

IMPORTANT: Models containing cooling tubes and drains should not be mounted vertically. Drains must be oriented in the 6 o'clock position.

Figure 24 - Mount Configurations

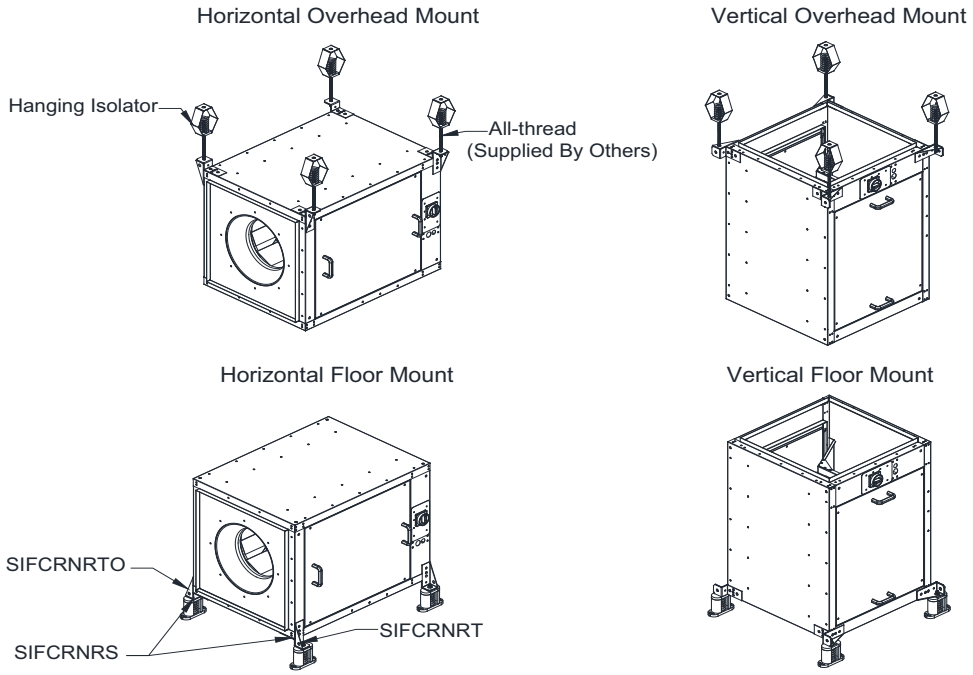

Square Inline Mounting Bracket Detail

Figure 25 - Square Inline Mount Details

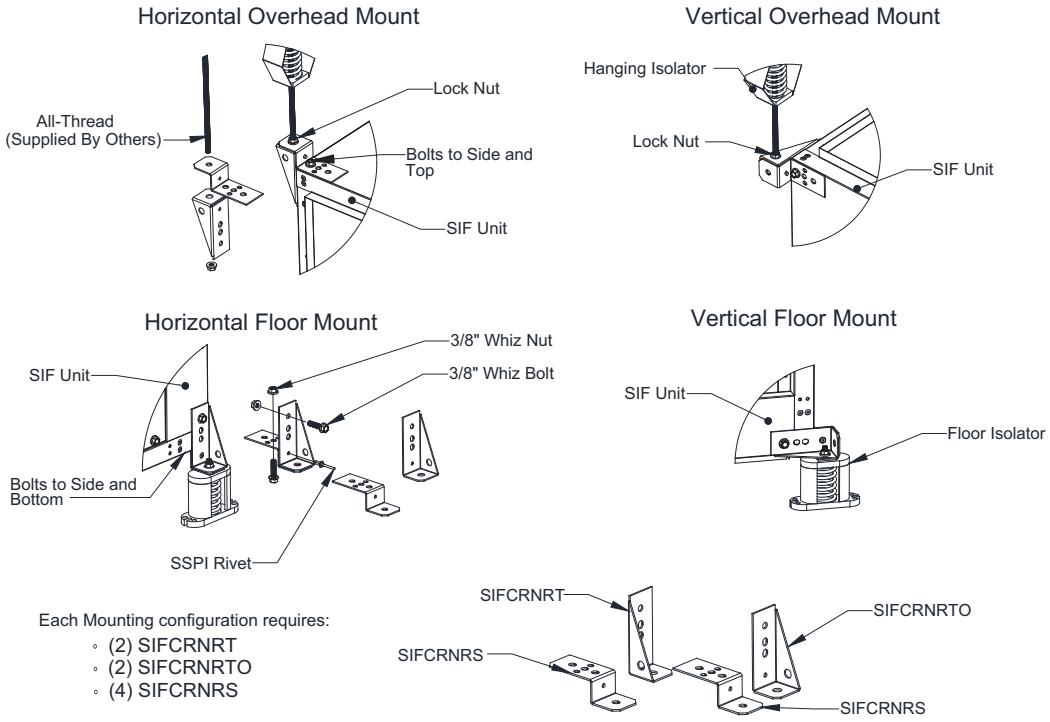

Each Mounting configuration requires:

- (2) SIFCRNRT
- (2) SIFCRNRTO
- (4) SIFCRNRS

Square Inline Fan Drain

Figure 26 - Direct Drive Stainless Steel Inline Fans

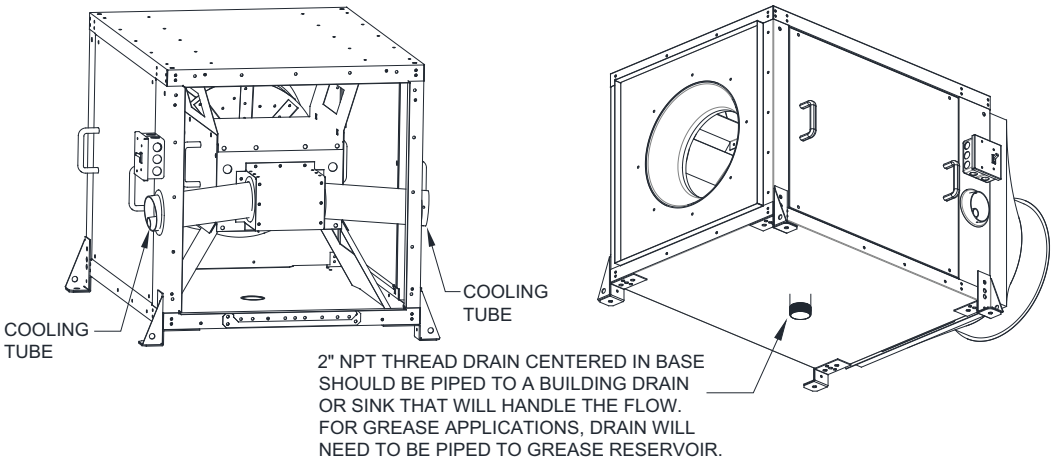

*FAN MUST BE INSTALLED WITH DRAIN POINTING DOWN.

Square Inlet Discharge Options

Figure 27 - Square Inlet Discharge

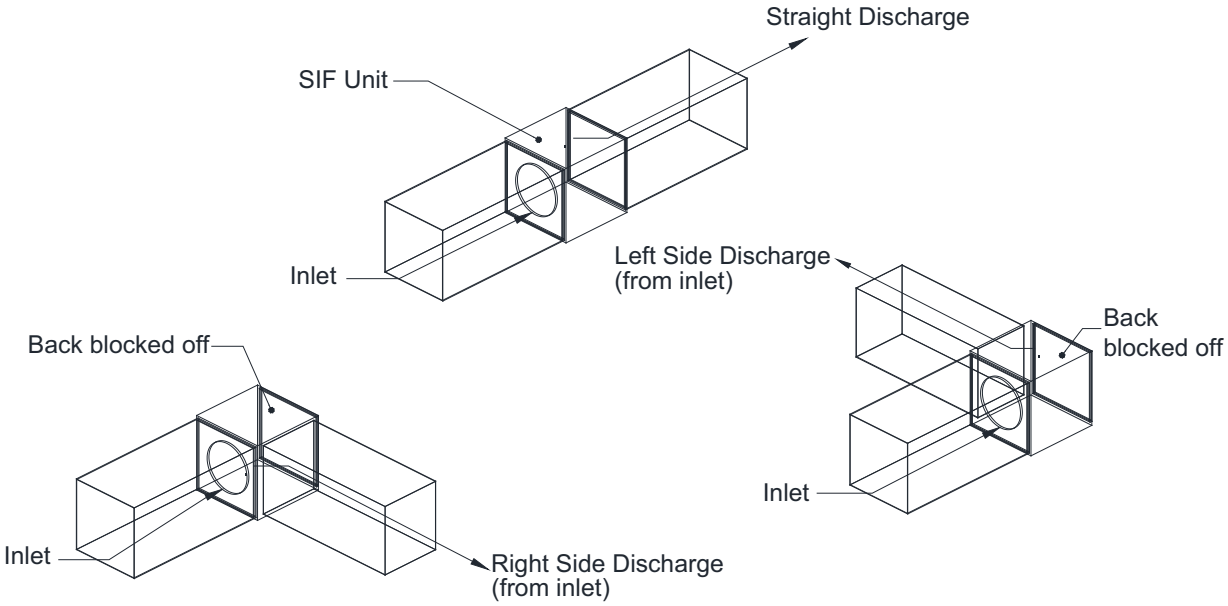

Square Inline Discharge Configurations

Figure 28 - Square Inline Discharge Details

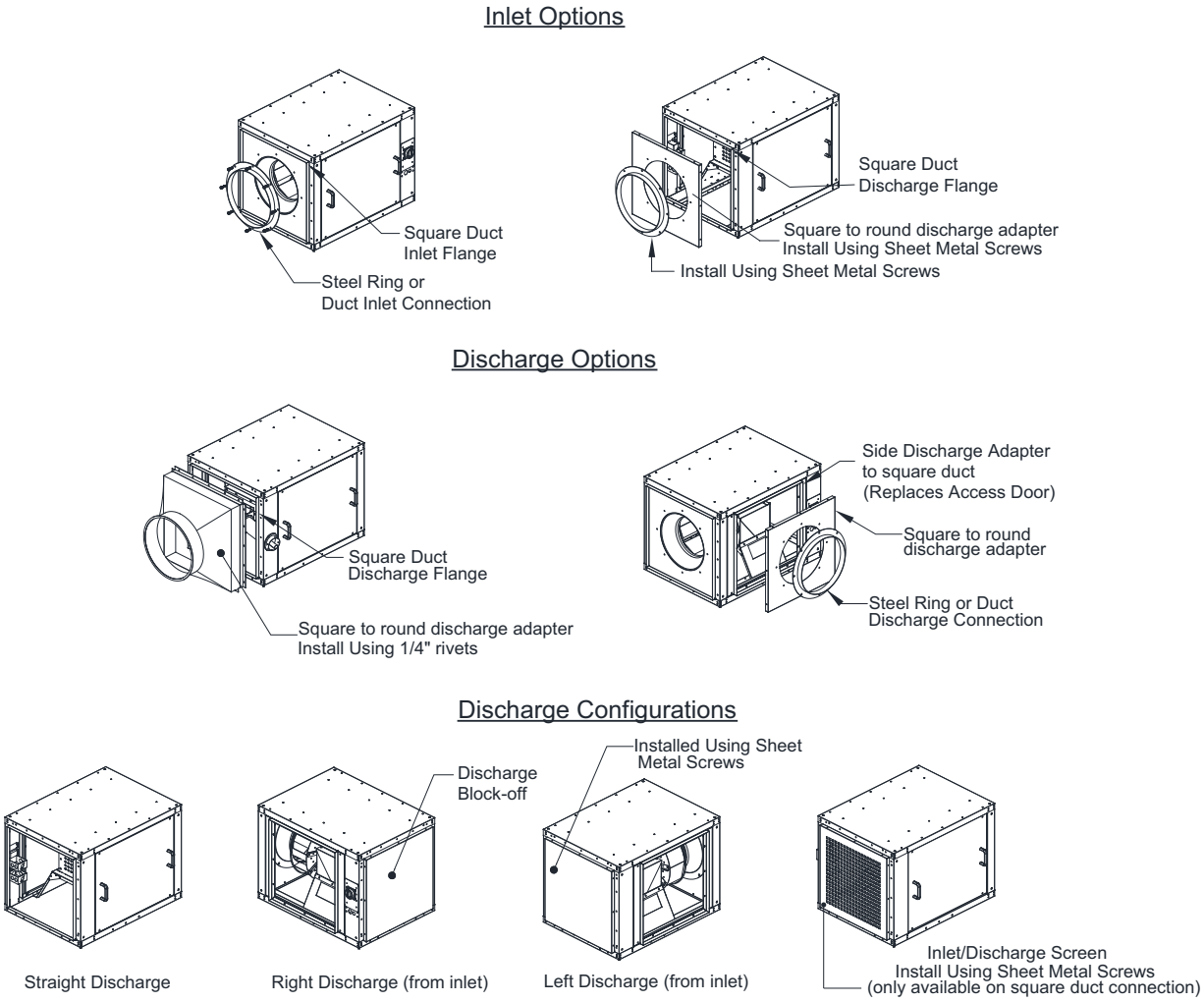

NOTE: If the fan manufacturer's duct is not used, black iron grease duct will need to be welded directly to the unit.

Inlet/Outlet Connections			
Fan Size	**Square Duct Dimension**	**Duct Diameter**	**Steel Ring O.D.**
9-10	12" x 12"	10"	N/A
11	16" x 16"	12"	12.5"
13	18" x 18"	14"	13.5"
15	23" x 23"	16"	15.25"
18	24" x 24"	20"	18.5"
20	28" x 28"	20"	19.625"
24	35" x 35"	24"	25.375"
30	42" x 42"	24"	24.375"
36	48" x 48"	30"	30.5"

ELECTRICAL

WARNING!!

Disconnect power before installing or servicing unit. High voltage electrical input is needed for this equipment. A qualified electrician should perform this work.

Before connecting power to the fan, read and understand the entire section of this document. As-built wiring diagrams are furnished with each unit by the factory and are attached to the fan or provided with paperwork packet.

Electrical wiring (**Table 3**) and connections must be made in accordance with local ordinances and the National Electric Code, ANSI/NFPA 70. Verify the voltage and phase of the power supply, and the wire amperage capacity is in accordance with the unit nameplate. For additional safety information, refer to AMCA publication 410-96, *Recommended Safety Practices for Users and Installers of Industrial and Commercial Fans.*

1. **Always disconnect power before working on or near this equipment. Lock and tag the disconnect switch and/or breaker to prevent accidental power-up**.
2. A dedicated branch circuit should supply the motor circuit with short circuit protection according to the National Electric Code. This dedicated branch should be run to the junction box.
3. A disconnect switch is shipped with every fan. The switch maybe located on the exterior of the fan or in the interior of the fan.On down-blast direct drive fans, the disconnect function is built into the speed controller.
4. Verify that the power source is compatible with the requirements of your equipment. The nameplate identifies the **proper phase and voltage** of the equipment.
5. Before connecting the unit to the building's power source, verify that the power source wiring is de-energized.
6. Secure the power cable to prevent contact with sharp objects.
7. Do not kink power cable and never allow the cable to encounter oil, grease, hot surfaces, or chemicals.
8. Before powering up the unit, make sure that the fan rotates freely. Make sure that the interior of the unit is free of loose debris or shipping materials.
9. If any of the original wire supplied with the unit must be replaced, it must be replaced with type THHN wire or equivalent.

IMPORTANT: FANS WITH HINGE KITS REQUIRE ENOUGH SLACK IN THE WIRING TO THE FAN TO ALLOW FAN TO TILT BACK TO THE OPEN POSITION. ELECTRICIAN MUST CHECK THIS AND ACCOUNT FOR THE RANGE OF MOTION OF THE FAN.

Table 3 - Copper Wire Ampacity

Wire Size AWG	Maximum Amps
14	15
12	20
10	30
8	50
6	65
4	85
3	100
2	115
1	130

Permanent Split Capacitor (PSC) Motor Speed Control

Figure 29 - PSC Motor Speed Control

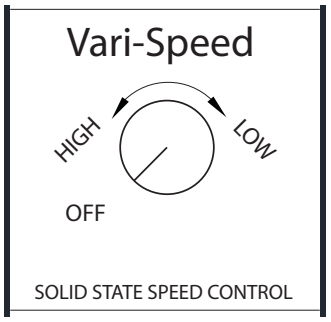

Some single-phase direct-drive fans contain speed controls that regulate the amount of voltage going to the motor. Specific PSC motors must be used in conjunction with speed controls. The speed control has a knob (**Figure 29**) with an off position along with high to low range. At high speed, the speed control allows all of the line voltage to pass directly to the motor.

A minimum speed adjustment is provided to allow independent control of the minimum speed setting. Minimum speed adjustment ensures the motor runs with sufficient torque to prevent stalling. To adjust this:

1. Motor must be in actual operating conditions to achieve proper speed adjustment. Motor will not slow down unless proper load is applied.
2. Turn main control knob to lowest speed position.
3. Locate and adjust minimum speed setting. This can be found under the speed control faceplate. Use a small screwdriver to adjust. Rotate clockwise to decrease minimum speed; counter-clockwise to increase minimum speed.
4. Motor will now operate from this preset minimum speed to full speed.

The lowest minimum voltage that may be applied to these motors is 65V AC. Running lower voltages to the motor can cause premature failure and overheating problems.

Motorized Intake Damper

On units shipped with the optional motorized intake damper, a power transformer is supplied with the unit if the main incoming voltage is greater than 120V. The damper motor is automatically energized when the main disconnect switch is in the ON position. **No external wiring to the damper motor is required.**

Electronically Commutated Motor (ECM) Speed Control

An Electrically Commutated Motor (ECM) with speed control allows for an accurate manual adjustment of the fan's speed. The benefits of using an EC motor is exceptional efficiency, performance, and motor life.

External PWM Signal

The fan unit will be shipped with power wiring and communication wiring fed to an internal junction box. The fan is shipped with Shielded Twisted Pair (STP) wire which is used to wire to a remote PWM signal. Red wire is used to go to the positive PWM signal, black wire is used to go to the negative PWM signal. Reference schematics for all wiring connections. STP is connected to the communication wiring of the motor using wire nuts in the junction box. If a preset length of STP is provided, it will be connected to the junction box from the factory. Run the STP through any available knockout in the fan base.

Unit Mount Controller

The RTC speed controller features a 4 digit LED display with a five button interface. All parameters can be accessed through the user menu. The percent of run speed can be changed by using the **Up** and **Down** buttons followed by pressing **Enter** (middle button) to save changes. Every **ten seconds** the display will toggle between current percentage of run speed and current RPMs. The flow index has a range of **0-100%** and is typically linear with motor RPM.

If the remote function (re) is enabled, the speed is controlled through a **0-10V** input. **0V = 0%** and **10V = 100%**, unless overridden by the low speed and high speed limits.

The speed controller requires a **24V AC** input and can locally turn the motor on and off. The motor RPM range is fully adjustable between the minimum and maximum setpoints, see LSPD and HSPD on the programming display. For more information, see the RTC control operating manual.

For all motors except 16Z, 18Z, 20Z, 22Z, 25Z, 28Z: If "oFF" is being displayed, and the speed is set above 300 RPM, the ECM is not receiving RPM feedback. Check that the ECM is wired correctly. Check that the motor "tyP" in the settings matches the motor manufacturer. 16Z, 18Z, 20Z, 22Z, 25Z, 28Z do not send RPM feedback.

NOTE: A Variable Frequency Drive (VFD) is required to adjust the speed control of a non-electrically commutated 3-phase direct-drive motor.

Figure 30 - RTC Speed Controller and Menu

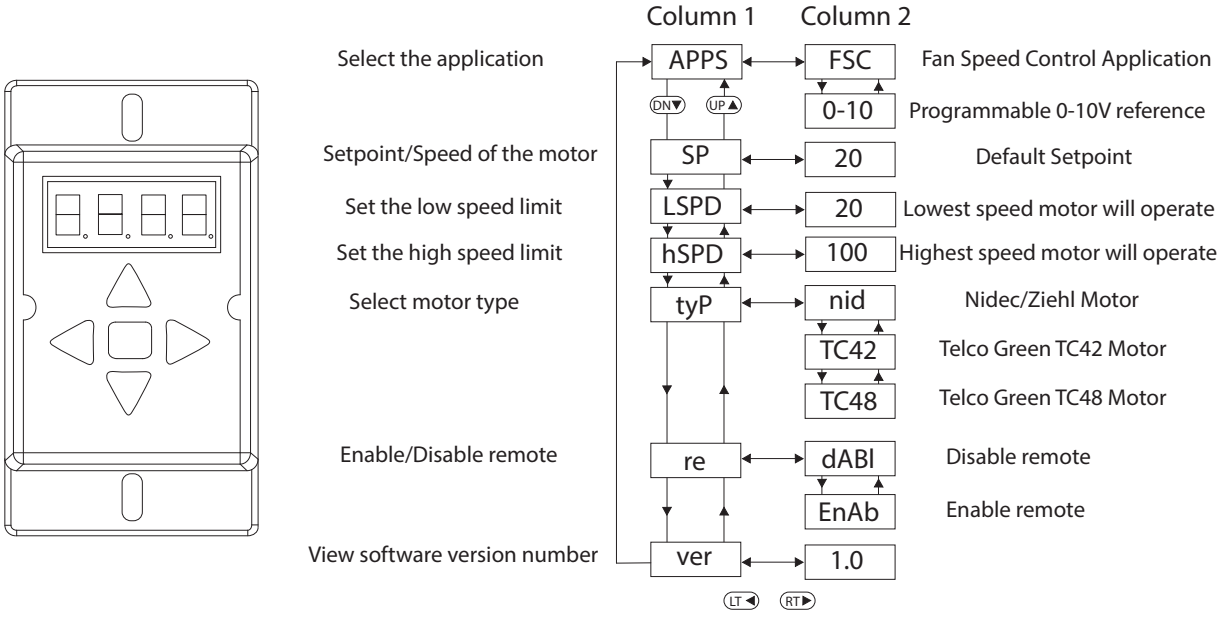

External PWM Signal

Figure 31 illustrates ECM fan wiring. The fan unit will be shipped with power wiring and communication wiring fed to an internal junction box
(J-Box). The fan is shipped with Shielded Twisted Pair (STP) wire, which is used for wiring to a remote PWM signal. Power the unit off. Remove top cover from fan. Remove J-Box cover to access wiring connections.

- The STP wire is connected to the communication wiring of the motor using wire nuts in the junction box. If a preset length of STP is provided, it will be connected to wiring located in junction box from the factory.
- If wiring is not connected from the factory, connect the red wire to the positive PWM signal and the black wire to the negative PWM signal. Reference schematics for all wiring connections (PxA and PxB).
- Run STP wiring through the cooling tube and along the power wiring of the fan, secure the two together with zip ties. Ensure there is enough slack for the fan to hinge open and close freely.
- Refer to wiring schematics to verify wiring and connections.

Figure 31 - ECM Fan Wiring

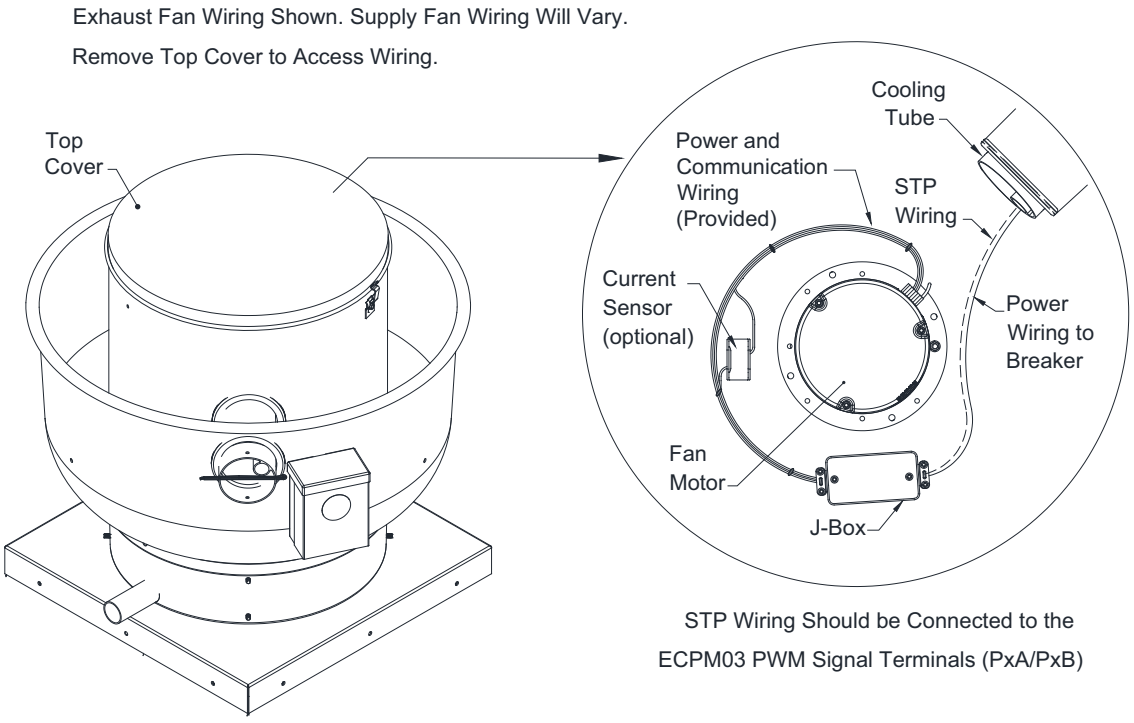

Motor Speed Controller (MSC) Installation

The Motor Speed Controller (MSC) is a versatile device able to output various signal types to many different Electrically Commutated Motors (ECMs). The MSC signal output types can be selected under the 'Motor Type' section of the MSC menu. The MSC may be installed in a fan, remotely in a kitchen space, or in a mechanical room. While this device can be mounted remotely and powered using 24V, it may also be mounted with the fan where it will be exposed to higher voltages. If installed in the fan, the electrical installation must be carried out according to the appropriate regulations (e.g., cable cross-sections, circuit breaker, protective earth [PE] connection). National and local codes must be followed during the installation process.

The MSC board may be powered through a 120VAC/24VAC CLASS 2 transformer, 120V AC/24V DC CLASS 2 power supply, or through MODBUS connections.

The MSC contains static sensitive components. Therefore, you must handle with care to avoid damage to these components. All operations concerning installation, commissioning, and maintenance must be carried out by qualified, skilled personnel who are familiar with the installation, assembly, commissioning, and operation of the electronic board and the application for which it is being used.

Ensure proper handling and avoid excessive mechanical stress. Do not bend any components when handling or installing component. **Do not touch any electronic components or contacts**.

Precautions must be adhered to during installation, testing, servicing, and repairing of this board. Component damage may result if proper procedures are not followed.

Do not install the MSC where it is subjected to adverse environmental conditions such as combustibles, oils, hazardous vapors, corrosive chemicals, excessive dust, moisture, direct sunlight, or extreme temperatures. When removing or installing the MSC to the j-box, verify the gasket is present. All electrical connections for the MSC are located on the backside of the controller. Refer to **Figure 32** for details on installation and electrical connections. When the micro USB programming port is not in use, place the weather-seal plug into the port location.

Figure 32 - Installation/Electrical Connections

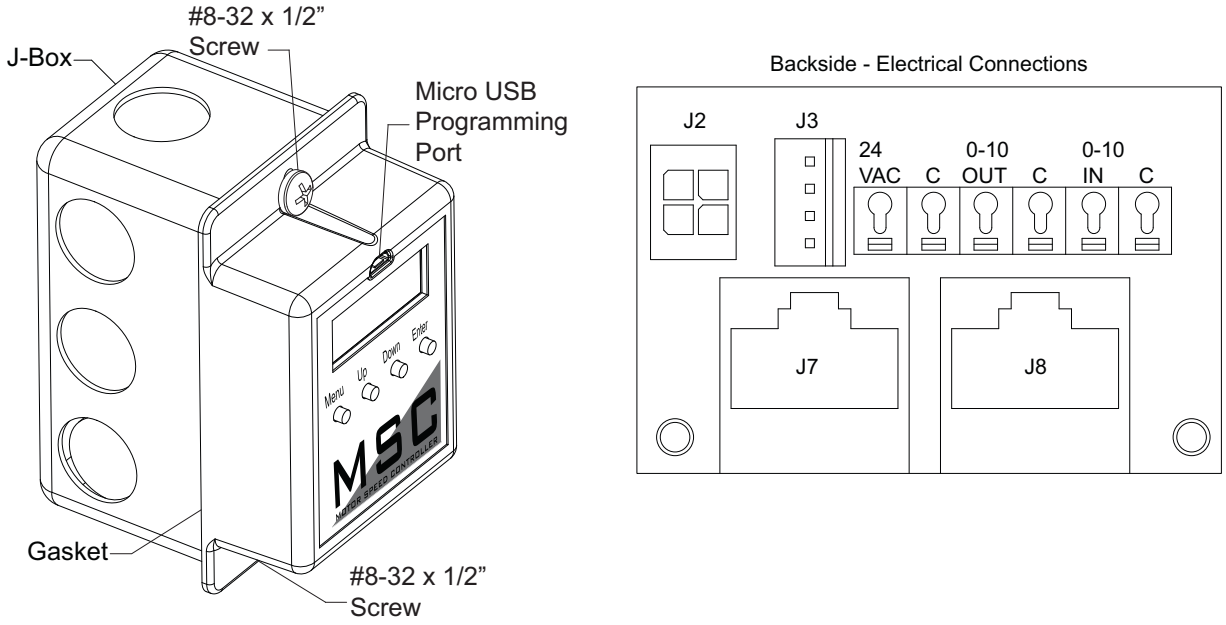

MSC Controls Overview

There are four buttons to navigate through the menu screens, refer to **Figure 33**.

Press the **MENU** button to access menu settings/parameters, pressing **MENU** will also back out of the current menu screen. To scroll through menus, use **UP** and **DOWN** buttons. Press the **ENTER** button to change setting/parameter selection.

To enter password, press MENU, then press **ENTER** when “Board Config” is displayed. Use **UP** and **DOWN** to scroll through numbers, press **ENTER** to advance to the next numerical setting. To save changes, press **MENU** until the screen displays “SAVE CHANGES? [ENTER] TO SAVE.” Press the ENTER button to save changes.

Figure 33 - MSC Front Detail View

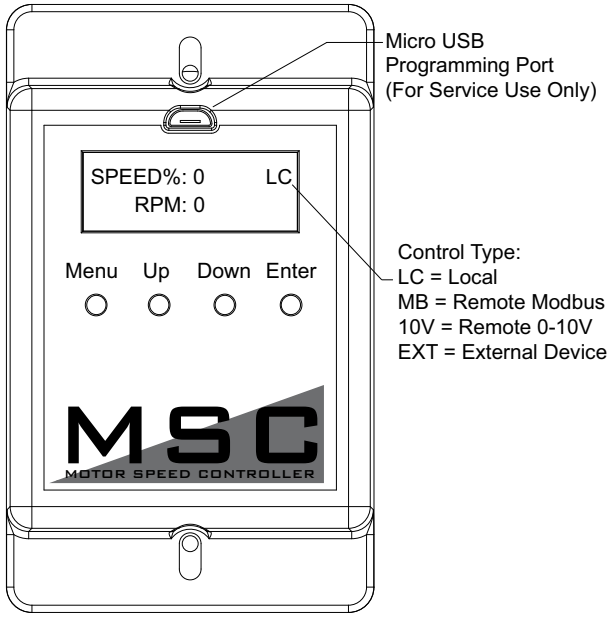

MSC Menu

Board Config - Password (default is 0225)

- **Motor Type** - User may change motor type between Nidec, Telco 42, Telco 48, Ziehl, 0-10V, Other.
- **Control Type** - This setting adjusts how the fan will be controlled.
  - **Local** - The fan will be controlled by the MSC.
  - **Remote Modbus** - The fan will be controlled by another master board through the MSC. A connection between the 0-10V Out to 0-10V In must be made for start command.
  - **Remote 0-10V** - The fan will be controlled by an external 0-10V signal.
- **Speed Settings** - Provides access to speed and voltage settings.
  - **Low Speed** - Adjustable speed from 20% up to high speed setting, or 0-10V. Setting cannot go above High Speed parameter.
  - **High Speed** - Adjustable speed from 100% down to low speed setting, or 10-0V. Setting cannot go below Low Speed parameter.
  - **Set Speed%** - Adjustable speed range is dependent on Low Speed and High Speed settings. This controls the output of the motor.
  - **Voltage Range** - Only available when Motor Type “OTHER” is selected. Default setting is 24V. 5V, and 10V are also available.

- **Modbus #** - Adjustable Modbus ID. Exhaust Fan range 11-18, Supply Fan range 21 or 22. **A VFD and MSC cannot use the same Modbus #**.
- **Options**
  - **Feedback Fault** - If set to ENABLED, the MSC will monitor RPM feedback. If the MSC does not receive data for 30 seconds or 70% of the expected RPM, this fault will be displayed. **Ziehl motors do not provide feedback.**
  - **2 Speed** - The 0-10V output cannot be used when the 2 Speed or Manual Speed options are On, or if the "Control Type" is set to Modbus. When the 0-10V OUT and 0-10V IN terminals are **not** jumped together, the fan will operate at low speed. When 0-10V OUT and 0-10V IN terminals are jumped together, the fan will operate at high speed.
  - **Analog Speed** - The user may enable/disable the option, and calibrate a potentiometer for proper operation that is connected between the 0-10V OUT and 0-10V IN terminals. When enabled, you must calibrate the potentiometer. Follow the MSC's on-screen instructions. The speed will be adjustable between 0V (low speed) to 10V (high speed).
  - **Input Threshold** - When control type is set to Remote 0-10V, an input threshold will be created for motor control. Refer to **Figure 34 on page 36** for threshold examples.
    - **Zero Operation** - The user may select how the motor will operate when the 0-10V input is at 0V. The options will be Off or Low Speed (default).
    - **Threshold** - Increasing the threshold value will allow for the device to hold its voltage/RPM output while the input is between the 0 - threshold value.
- **Restore Settings** - Provides access to restore factory settings, and test & balance settings.
  - **Factory Settings** - This will reset all values back to factory settings.
  - **T & B Settings** - This will reset all values back to last saved test & balance settings.
- **Change Password** - Users may update the password setting to their own. Password 0225 will also be stored for backup. Both passwords will allow users to enter "Board Config" settings.

Software Version - Displays the current software version installed on the board.

Faults - This provides access to "Fault History," "Fault Totals," and "Clear Faults."

- **Fault History** - Displays fault history and board reboots in chronological order. Possible displayed faults are:
  - **No Faults** - There are no active faults with the system.
  - **Feedback Fault** - Only displayed for motors with feedback capabilities.
  - **Reboot** - Any time the fan goes from OFF to ON, this "fault" will be logged. This fault will only display in "Fault History."
  - **Modbus** - Issue with Modbus communication between the MSC and master board.
  - **Variable Device Fault** - When "Analog Speed" is selected and a potentiometer is connected, if the voltage drops below 1V, this fault will be displayed.
- **Fault Totals** - Displays amount of faults for Modbus, Feedback, Var Device, Reboot, and Total Faults.
- **Clear Faults** - Users may clear all faults from the board.

Service - This provides access to service settings. Password: 1234

- **Save T & B** - After the test & balance process has been completed, save adjustments under this menu.
- **IO Status** - Provides access to information about the inputs and outputs of the MSC board.
  - **V In** - Displays the incoming voltage (0-10V) to the MSC.
  - **V Out** - Displays the output voltage (0-10V) to the motor.
  - **RPM** - Displays motor RPM feedback. **Ziehl motors do not provide feedback.**
  - **PWM V** - Displays equivalent voltage reading of the PWM output to the motor.
  - **Speed%** - Displays PWM percentage output value to the motor.

Input Threshold

Figure 34 - Input Threshold Examples

Factory Default: Zero operation set to low speed, threshold set to 0V.

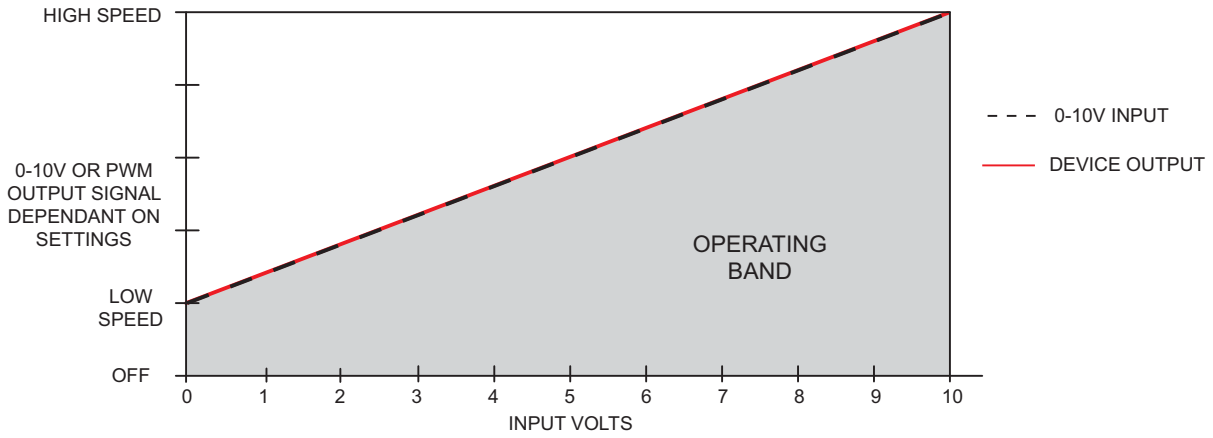

Zero operation set to low speed, threshold set to 2V.

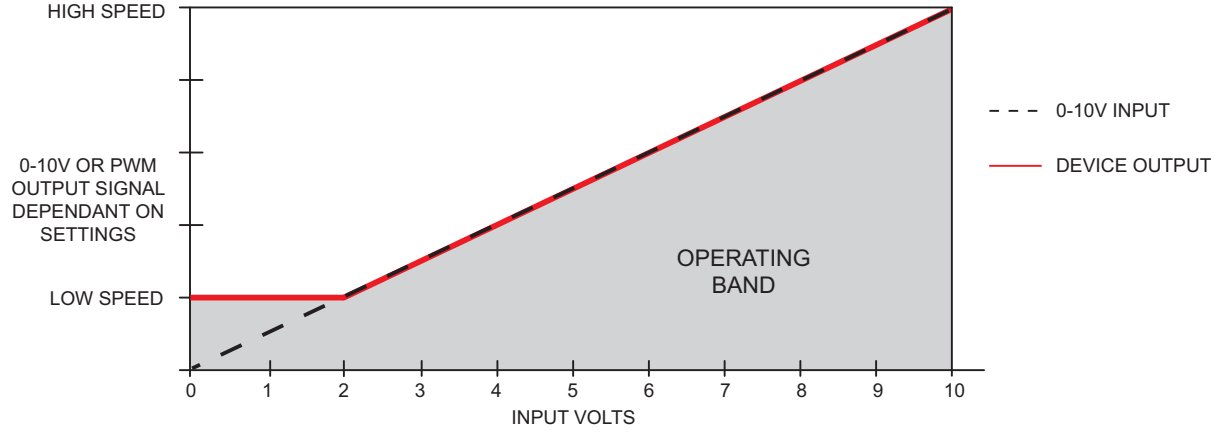

Zero operation set to off, threshold set to 2V.

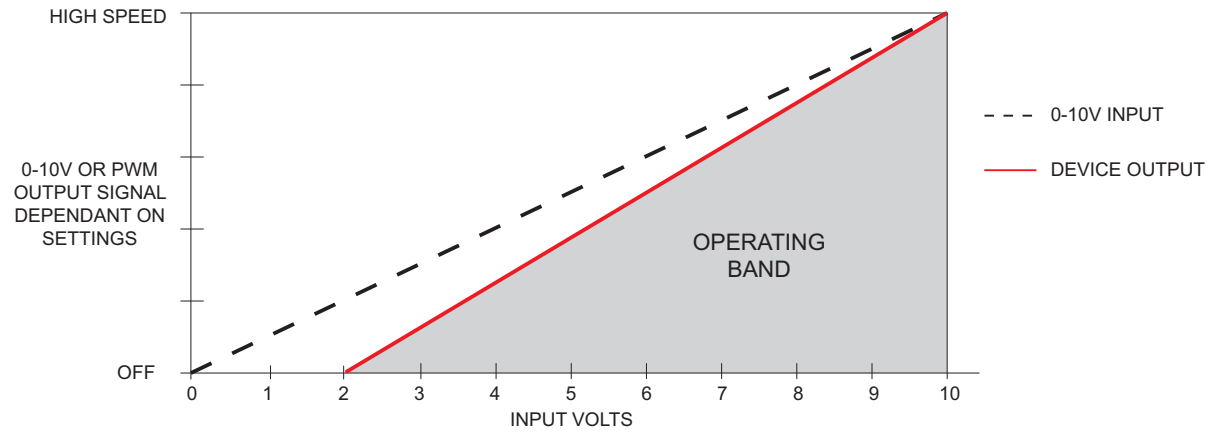

MSC Menu Tree

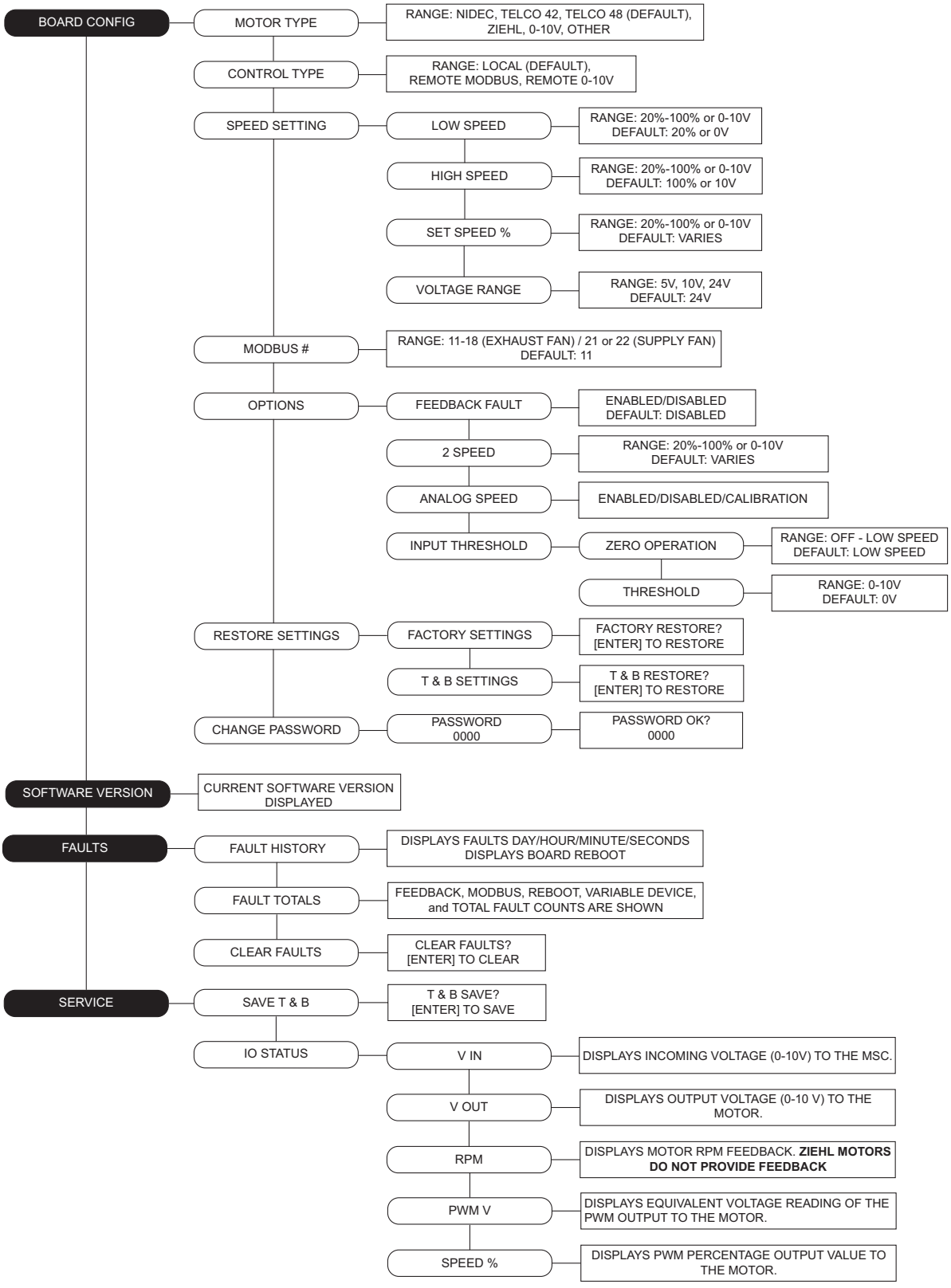

Fan to Building Wiring Connection

Figure 35 - Wiring Connection Details

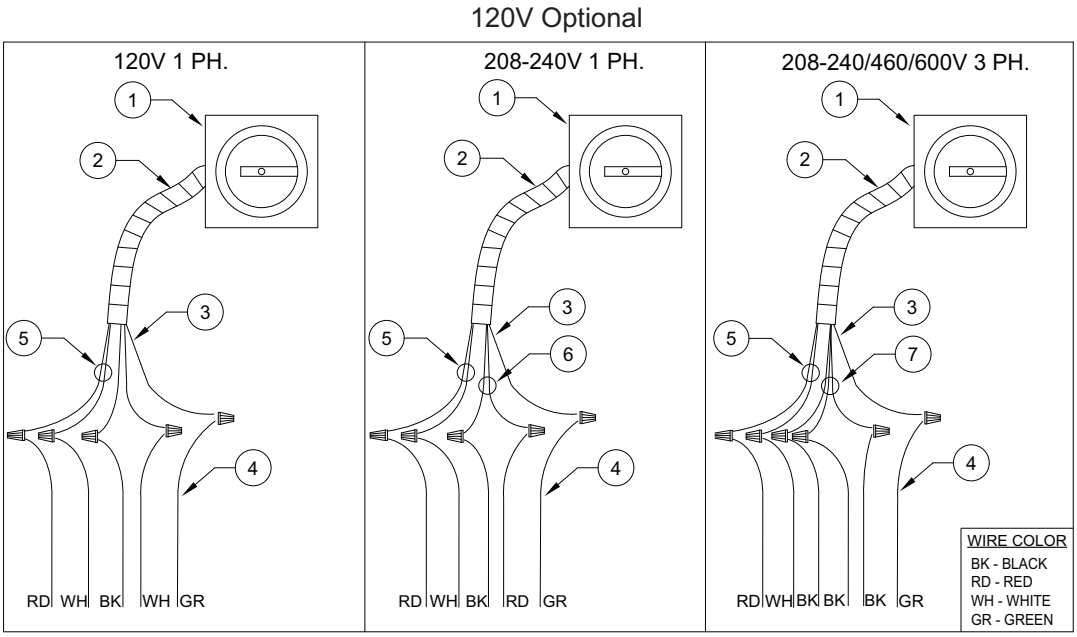

1. Disconnect Switch
2. Galflex Conduit (In Unit)
3. Factory Wiring
4. Field Supplied Wiring - From building power or pre-wired control panel.
5. 120V Single Phase Standing Power
6. 208-240 Single Phase
7. Three Phase

Variable Frequency Drive (VFD)

WARNING!!
- Before installing the VFD drive, ensure the input power supply to the drive is OFF.
- The power supply and motor wiring of the VFD must be completed by a qualified electrician.
- The VFD is factory programmed, only change if replaced or ordered separately.

Consult the VFD manual and all documentation shipped with the unit for proper installation and wiring of the VFD. The VFD has been programmed by the factory with ordered specific parameters. Use **Table 5** as a guide during installation.

Table 5 - VFD Installation Check List

Check Off	Description
	The installation environment conforms to the VFD manual.
	The drive is mounted securely.
	Space around the drive meets the drive's specification for cooling.
	The motor and driven equipment are ready to start.
	The drive is properly grounded.
	The input power voltage matches the drive's nominal input voltage.
	The input power connections at L1, L2, and L3 are connected and tight.
	The input power protection is installed.
	The motor power connection at U, V, and W are connected and tight.
	The input, motor, and control wiring are run in separate conduit runs.
	The control wiring is connected and tight.
	NO tools or foreign objects (such as drill shavings) are in the drive.
	NO alternative power source for the motor (such as a bypass connection) is connected - NO voltage is applied to the output of the drive.

Variable Frequency Drive (VFD) Installation

Input AC Power

- Circuit breakers feeding the VFDs are recommended to be thermal-magnetic and fast-acting. They should be sized based on the VFD amperage and according to . Refer to the installation schematic for exact breaker sizing.
- Every VFD should receive power from its own breaker. If multiple VFDs are to be combined on the same breaker, each drive should have its own protection measure (fuses or miniature circuit breaker) downstream from the breaker.
- Input AC line wires should be routed in conduit from the breaker panel to the drives. AC input power to multiple VFDs can be run in a single conduit if needed. **Do not combine input and output power cables in the same conduit.**
- The VFD should be grounded on the terminal marked PE. A separate insulated ground wire must be provided to each VFD from the electrical panel. This will reduce the noise being radiated in other equipment.

ATTENTION: Do not connect incoming AC power to output terminals U, V, W. Severe damage to the drive will result. Input power must always be wired to the input L terminal connections (L1, L2, L3).

VFD Output Power

- Motor wires from each VFD to its respective motor MUST be routed in a **separate steel** conduit away from control wiring and incoming AC power wiring. This is to avoid noise and crosstalk between drives. An insulated ground must be run from each VFD to its respective motor. Do not run different fan output power cables in the same conduit.
- VFD mounted in ECP: A load reactor should be used and sized accordingly when the distance between the VFD and motor is greater than specified below. The load reactor should be installed within 10 feet of the VFD output:

  208/230V - Load reactor should be used when distance exceeds 250 feet.
  460/480V - Load reactor should be used when distance exceeds 50 feet.
  575/600V - Load reactor should be used when distance exceeds 25 feet.
- VFD mounted in fan: The load reactor should be sized accordingly when the VFD is mounted in the fan.

  208/230V - Load reactor is optional but recommended for 15 HP and above motors.
  460/480V - Load reactor is optional but recommended for 7.5 HP and above motors.
  575/600V - Load reactors are required for all HP motors.
- If the distance between the VFD and the motor is extremely long, up to 1000 FT, a dV/dT filter should be used, and the VFD should be increased by 1 HP or to the next size VFD. The dV/dT filter should be sized accordingly and installed within 10 feet of the output of the VFD.

  208/230V – dV/dT filter should be used when distance exceeds 400 feet.
  460/480V – dV/dT filter should be used when distance exceeds 250 feet.
  575/600V – dV/dT filter should be used when distance exceeds 150 feet.
- Do not install a contactor between the drive and the motor. Operating such a device while the drive is running can potentially cause damage to the power components of the drive.
- When a disconnect switch is installed between the drive and motor, the disconnect should only be operated when the drive is in a STOP state.

VFD Programming

Programming

1. The Drive should be programmed for the proper motor voltage. P107 is set to 0 (Low) if motor voltage is 120V AC, 208V AC or 400V AC. P107 is set to 1 (High) if the motor voltage is 230V AC, 480V AC, or 575V AC.
2. The Drive should be programmed for the proper motor overload value. P108 is calculated as Motor FLA x 100 / Drive Output Rating (available in).

To enter the PROGRAM mode to access the parameters:

1. Use the buttons on the VFD screen (**Figure 36**) to adjust VFD settings. Press the Mode (M) button. This will activate the password prompt (PASS).
2. Use the Up and Down buttons to scroll to the password value (the factory default password is “0225”) and press the Mode (M) button. Once the correct password is entered, the display will read “P100”, which indicates that the PROGRAM mode has been accessed at the beginning of the parameter menu.
3. Use the Up and Down buttons to scroll to the desired parameter number.
4. Once the desired parameter is found, press the Mode (M) button to display the present parameter setting. The parameter value will begin blinking, indicating that the present parameter setting is being displayed. The value of the parameter can be changed by using the Up and Down buttons.
5. Pressing the Mode (M) button will store the new setting and exit the PROGRAM mode. To change another parameter, press the Mode (M) button again to re-enter the PROGRAM mode. If the Mode button is pressed within 1 minute of exiting the PROGRAM mode, the password is not required to access the parameters. After one minute, the password must be re-entered to access the parameters again.

P500 parameter provides a history of the last 8 faults on the drive. It can be accessed without entering PROGRAM mode.

Figure 36 - VFD Screen

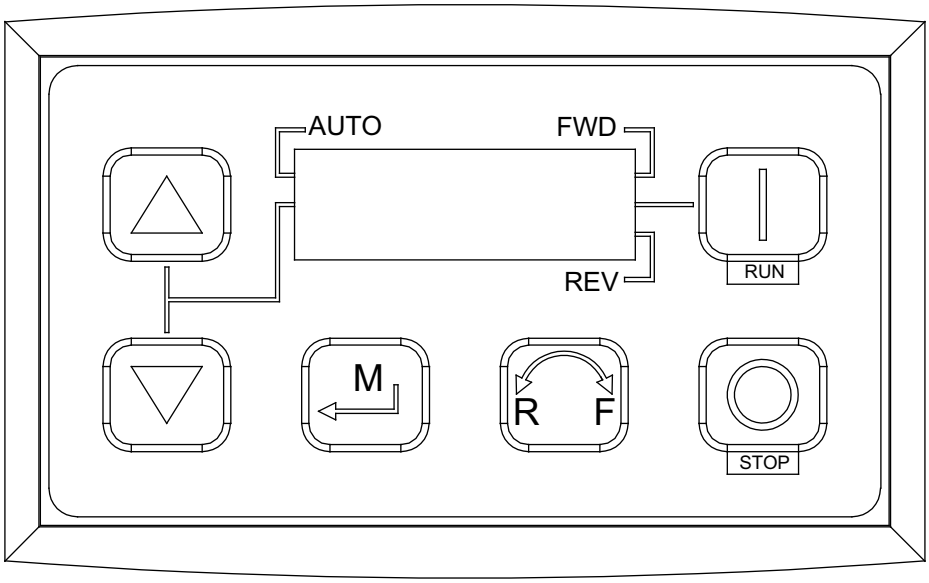

ACTECH SMV VFD

Table 6 - Cross Reference Table

HP	Part Number	Volts	1Ø Input	3Ø Input	Input Amps 1Ø 120V AC	Input Amps 1Ø 240V AC	Output Amps	Breaker 1Ø 120V AC	Breaker 1Ø 240V AC
0.33	ESV251N01SXB	120/240V	X	-	6.8	3.4	1.7	15	15
0.5	ESV371N01SXB	120/240V	X	-	9.2	4.6	2.4	15	15
1	ESV751N01SXB	120/240V	X	-	16.6	8.3	4.2	25	15
1.5	ESV112N01SXB	120/240V	X	-	20	10	6	30	20

HP	Part Number	Volts	1Ø Input	3Ø Input	Input Amps 1Ø	Input Amps 3Ø	Output Amps	Breaker 1Ø	Breaker 3Ø
0.5	ESV371N02YXB	240V	X	X	5.1	2.9	2.4	15	15
1	ESV751N02YXB	240V	X	X	8.8	5	4.2	15	15
1.5	ESV112N02YXB	240V	X	X	12	6.9	6	20	15
2	ESV152N02YXB	240V	X	X	13.3	8.1	7	25	15
3	ESV222N02YXB	240V	X	X	17.1	10.8	9.6	30	20
5	ESV402N02TXB	240V	-	X	-	18.6	16.5	-	30
7.5	ESV552N02TXB	240V	-	X	-	26	23	-	40
10	ESV752N02TXB	240V	-	X	-	33	29	-	50
15	ESV113N02TXB	240V	-	X	-	48	42	-	80
20	ESV153N02TXB	240V	-	X	-	59	54	-	90
1	ESV751N04TXB	480V	-	X	-	2.5	2.1	-	15
1.5	ESV112N04TXB	480V	-	X	-	3.6	3	-	15
2	ESV152N04TXB	480V	-	X	-	4.1	3.5	-	15
3	ESV222N04TXB	480V	-	X	-	5.4	4.8	-	15
5	ESV402N04TXB	480V	-	X	-	9.3	8.2	-	15
7.5	ESV552N04TXB	480V	-	X	-	12.4	11	-	20
10	ESV752N04TXB	480V	-	X	-	15.8	14	-	25
15	ESV113N04TXB	480V	-	X	-	24	21	-	40
20	ESV153N04TXB	480V	-	X	-	31	27	-	50
25	ESV183N04TXB	480V	-	X	-	38	34	-	70
30	ESV223N04TXB	480V	-	X	-	45	40	-	80
1	ESV751N06TXB	600V	-	X	-	2	1.7	-	15
2	ESV152N06TXB	600V	-	X	-	3.2	2.7	-	15
3	ESV222N06TXB	600V	-	X	-	4.4	3.9	-	15
5	ESV402N06TXB	600V	-	X	-	6.8	6.1	-	15
7.5	ESV552N06TXB	600V	-	X	-	10.2	9	-	20
10	ESV752N06TXB	600V	-	X	-	12.4	11	-	20
15	ESV113N06TXB	600V	-	X	-	19.7	17	-	30
20	ESV153N06TXB	600V	-	X	-	25	22	-	40
25	ESV183N06TXB	600V	-	X	-	31	27	-	50
30	ESV223N06TXB	600V	-	X	-	36	32	-	60

START-UP OPERATION

Before starting up or operating the unit, verify all fasteners are secure and tight. Check the set screw in the wheel hub, bearings, and the fan sheaves (pulleys). With power **OFF** to the unit or before connecting the unit to power, turn the fan wheel by hand. Verify it is not striking the inlet or any obstructions. If necessary, re-center.

Special Tools Required: Standard Hand Tools, AC Voltage Meter, Tachometer

Start-up Procedure

1. Check all electrical connections are secure and tight.
2. Inspect the condition of the intake damper and damper linkage, if applicable.
3. Inspect the air-stream for obstructions or debris in wheel.
4. Compare the supplied **motor voltage** with the fan's nameplate voltage. If this does not match, correct the problem.
5. Place the external disconnect to the **ON** position to start the unit. Immediately place the disconnect switch off. **Check the rotation of the fan** with the directional arrow on the blower scroll. Reversed rotation will result in poor air performance, motor overloading and possible burnout. For units equipped with a single-phase motor, check the motor wiring diagram to change rotation. For 3-phase motors, any two power leads can be interchanged to reverse motor direction.
6. When the fan is started, observe the operation and check for any unusual noises.
7. Place the external disconnect switch back to the **ON** position. The system should be in full operation with all ducts attached. Measure the system airflow. The motor sheave (pulley) is variable pitch and allows for an increase or decrease of the fan RPM. If an adjustment is needed, refer to **"Pulley Adjustment" on page 44**. Refer to **Table 6** and **"Pulley Combination Chart" on page 47** for adjustment specifications.
8. Once the proper airflow is achieved, measure and record the fan speed with a reliable tachometer. **Caution - Excessive speed will result in motor overloading or bearing failure. Do not set fan RPMs higher than specified in the maximum RPM chart.** Refer to **"Troubleshooting" on page 48** for more information.
9. Measure and record the **voltage** and **amperage** to the motor. Compare with the motor's nameplate to determine if the motor is operating under safe load conditions. Once the RPM of the ventilator has been properly set, disconnect power. Re-check belt tension and pulley alignment, refer to **"Pulley Alignment/Proper Belt Tension" on page 45**.

Pulley Adjustment

The adjustable motor pulley is factory set for the RPM specified. Speed can be increased by closing or decreased by opening the adjustable motor sheave. Two groove variable pitch pulleys must be adjusted to an equal number of turns open or closed. Any increase in speed represents a substantial increase in horsepower required by the unit. Motor amperage should always be checked to avoid serious damage to the motor when the speed is varied. Always torque set screws according to the torque specifications shown in **Figure 37**.

Figure 37 - Adjustable Pulley

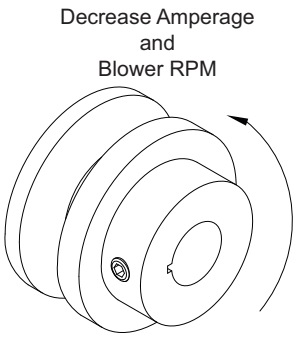

Setscrew Thread Size	Torque (in-lbs)
No. 10 (bushing)	32
1/4” (bushing)	72
5/16”	130

Table 7 - Maximum RPM and HP Chart

Belt Drive		
Blower Size	**Max. RPM**	**Max. HP**
10”	1800	2
12”	1500	3
15”	1400	5
18”	1200	5
20”	1000	10
25”	900	20

Direct Drive		
Blower Size	**Max. RPM**	**Max. HP**
15D	1800	2
20D	1500	3
24D	1400	5
30D	1200	5
36D	1000	10
16Z	2400	4
18Z	3200	5
20Z	2300	5
22Z	1900	5
25Z	1800	8
28Z	1400	7

Pulley Alignment/Proper Belt Tension

1. Belts tend to stretch and settle into pulleys after an initial start-up sequence. **Do not tension belts by changing the setting of the motor pulley**, this will change the fan speed and may damage the motor.
   - To re-tension belts, turn OFF power to the fan motor.
   - Loosen the fasteners that hold the blower scroll plate to the blower.
   - Rotate the motor to the left or right to adjust the belt tension. Belt tension should be adjusted to allow 1/64” of deflection per inch of belt span. Use extreme care when adjusting V-belts as not to misalign pulleys. Any misalignment will cause a sharp reduction in belt life and produce squeaky noises. Over-tightening will cause excessive belt and bearing wear as well as noise. Too little tension will cause slippage at startup and uneven wear.
   - **Whenever belts are removed or installed, never force belts over pulleys without loosening motor first to relieve belt tension.** When replacing belts, use the same type as supplied by the manufacturer. On units shipped with double groove pulleys, matched belts should always be used.
2. All fasteners should be checked for tightness each time maintenance checks are performed before restarting unit.

Belt tension examples:

- Belt span 12” = 3/16” deflection
- Belt span 32” = 1/2” deflection

Figure 38 - Pulley Alignment/Belt Tension

A. Belt Span Length
B. Deflection
C. Center Distance

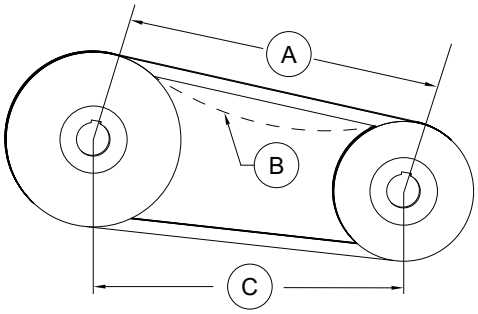

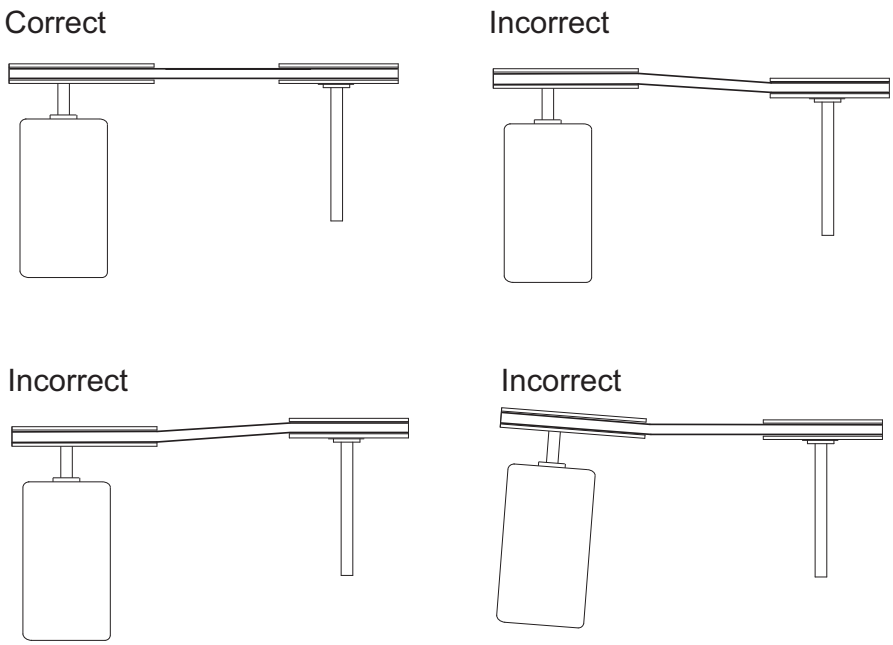

Bushing Information

Refer to **Figure 39** for fan bushing assembly details. **Bushing type is stamped on the face of the bushing.**

1. Place bushing key into bushing slot **(A)**, excludes H bushing.
2. Install bushing into wheel hub. Align bushing key with hub keyway **(B)**.
3. Use blue Loctite on the mounting bolts.
4. Install wheel assembly so that the bushing keyway **(C)** is aligned with the motor's shaft key **(D)**.
5. For Direct Drive motors, make sure the bushing is flush to the tip of the motor shaft.
6. For Belt Drive motors, make sure the wheel is properly aligned to the inlet.
7. Tighten set screw to lock shaft key in place. Install bolts and torque to proper setting listed in **Table 8**.
8. There are threaded holes provided on the bushing. These holes are for removing the bushing when required.

Figure 39 - Bushing Details

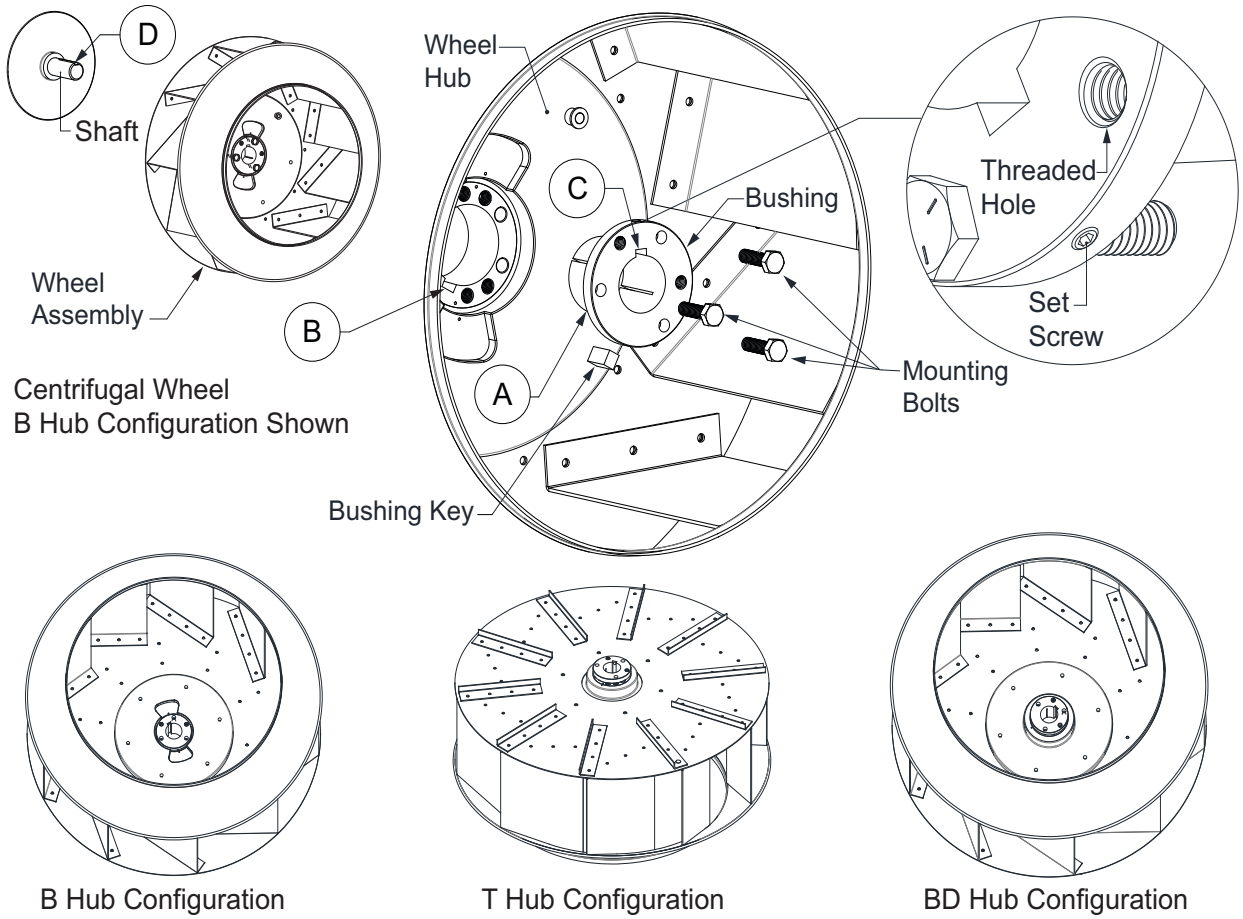

Table 8 - Bushing Specifications

Bushing Type	Outer Diameter	Bolt Size	Torque (In-lbs)	Set-Screw (in-lbs)
H	2-1/2"	1/4" X 3/4"	95	17
P1	3"	5/16" X 1"	192	65
Q1	4-1/8"	3/8" X 1-1/4"	348	115

Pulley Combination Chart

Motor RPM		1725												
1/3 to 1-1/2 HP		MOTOR PULLEY	Dd1	Dd2	Pd1	Pd2								
AX BELTS		1VL34	1.9	2.9	2	3								
			Open						TURNS ON MOTOR PULLEY					Closed
BLOWER PULLEY	DATUM DIAMETER	PITCH DIAMETER	5	4 1/2	4	3 1/2	3	2 1/2	2	1 1/2	1	1/2	0	
AK114	11	11.2	308	323	339	354	370	385	400	416	431	447	462	

1/3 to 1-1/2 HP		MOTOR PULLEY	Dd1	Dd2	Pd1	Pd2								
AX BELTS		1VL40	2.4	3.4	2.6	3.6								
			Open						TURNS ON MOTOR PULLEY					Closed
BLOWER PULLEY	DATUM DIAMETER	PITCH DIAMETER	5	4 1/2	4	3 1/2	3	2 1/2	2	1 1/2	1	1/2	0	
AK114	11	11.2	400	416	431	447	462	477	493	508	524	539	554	
AK94	9	9.2	488	506	525	544	563	581	600	619	638	656	675	
AK79	7.5	7.7	582	605	627	650	672	694	717	739	762	784	806	
AK66	6.2	6.4	701	728	755	782	809	836	863	889	916	943	970	
AK54	5	5.2	863	896	929	962	995	1028	1062	1095	1128	1161	1194	
AK46	4.2	4.4	1019	1059	1098	1137	1176	1215	1255	1294	1333	1372	1411	
AK39	3.5	3.7	1212	1259	1305	1352	1399	1445	1492	1539	1585	1632	1678	
AK32	3	3.2	1402	1455	1509	1563	1617	1671	1725	1779	1833	1887	1941	

2 to 5 HP		MOTOR PULLEY	Dd1	Dd2	Pd1	Pd2									
BX BELTS		2VP42	2.9	3.9	3	4									
			Open							TURNS ON MOTOR PULLEY					Closed
BLOWER PULLEY	DATUM DIAMETER	PITCH DIAMETER	6	5 1/2	5	4 1/2	4	3 1/2	3	2 1/2	2	1 1/2	1	1/2	0
2BK160H	15.4	15.7	330	339	348	357	366	375	385	394	403	412	421	430	439
2BK140H	13.4	13.7	378	388	399	409	420	430	441	451	462	472	483	493	504
2BK120H	11.4	11.7	442	455	467	479	491	504	516	528	541	553	565	577	590
2BK110H	10.4	10.7	484	497	511	524	537	551	564	578	591	605	618	631	645
2BK100H	9.4	9.7	534	548	563	578	593	608	622	637	652	667	682	697	711
2BK90H	8.4	8.7	595	611	628	644	661	677	694	710	727	744	760	777	793
2BK80H	7.4	7.7	672	691	709	728	747	765	784	803	821	840	859	877	896
2BK70H	6.4	6.7	772	794	815	837	858	880	901	923	944	965	987	1008	1030
2BK60H	5.4	5.7	908	933	958	984	1009	1034	1059	1084	1110	1135	1160	1185	1211
2BK55H	4.9	5.2	995	1023	1050	1078	1106	1133	1161	1189	1216	1244	1272	1299	1327
2BK50H	4.4	4.7	1101	1132	1162	1193	1223	1254	1285	1315	1346	1376	1407	1438	1468

7-1/2 to 10 HP		MOTOR PULLEY	Dd1	Dd2	Pd1	Pd2									
BX BELTS		2VP60	4.3	5.5	4.7	5.9									
			Open							TURNS ON MOTOR PULLEY					Closed
BLOWER PULLEY	DATUM DIAMETER	PITCH DIAMETER	6	5 1/2	5	4 1/2	4	3 1/2	3	2 1/2	2	1 1/2	1	1/2	0
2BK160H	15.4	15.7	516	527	538	549	560	571	582	593	604	615	626	637	648
2BK140H	13.4	13.7	592	604	617	630	642	655	667	680	693	705	718	730	743
2BK120H	11.4	11.7	693	708	722	737	752	767	781	796	811	826	840	855	870
2BK110H	10.4	10.7	758	774	790	806	822	838	854	871	887	903	919	935	951
2BK100H	9.4	9.7	836	854	871	889	907	925	943	960	978	996	1014	1031	1049
2BK90H	8.4	8.7	932	952	972	991	1011	1031	1051	1071	1091	1110	1130	1150	1170
2BK80H	7.4	7.7	1053	1075	1098	1120	1143	1165	1187	1210	1232	1255	1277	1299	1322

3 to 5 HP		MOTOR PULLEY	Dd1	Dd2	Pd1	Pd2									
BX BELTS		2VP42	2.9	3.9	3	4									
			Open							TURNS ON MOTOR PULLEY					Closed
BLOWER PULLEY	DATUM DIAMETER	PITCH DIAMETER	6	5 1/2	5	4 1/2	4	3 1/2	3	2 1/2	2	1 1/2	1	1/2	0
2B5V278	27.8	28.1	184	189	194	200	205	210	215	220	225	230	235	240	246
2B5V250	25	25.3	205	210	216	222	227	233	239	244	250	256	261	267	273
2B5V234	23.4	23.7	218	224	230	237	243	249	255	261	267	273	279	285	291
2B5V200	20	20.3	255	262	269	276	283	290	297	304	312	319	326	333	340
2B5V184	18.4	18.7	277	284	292	300	307	315	323	331	338	346	354	361	369
2B5V160	16	16.3	317	326	335	344	353	362	370	379	388	397	406	414	423
2B5V154	15.4	15.7	330	339	348	357	366	375	385	394	403	412	421	430	439
2B5V136	12.6	12.9	401	412	423	435	446	457	468	479	490	501	513	524	535
2B5V124	12.4	12.7	407	419	430	441	453	464	475	487	498	509	521	532	543
2B5V110	11	11.3	458	471	483	496	509	522	534	547	560	572	585	598	611

7-1/2 to 10 HP		MOTOR PULLEY	Dd1	Dd2	Pd1	Pd2									
BX BELTS		2VP60	4.3	5.5	4.7	5.9									
			Open							TURNS ON MOTOR PULLEY					Closed
BLOWER PULLEY	DATUM DIAMETER	PITCH DIAMETER	6	5 1/2	5	4 1/2	4	3 1/2	3	2 1/2	2	1 1/2	1	1/2	0
2B5V278	27.8	28.1	289	295	301	307	313	319	325	331	338	344	350	356	362
2B5V250	25	25.3	320	327	334	341	348	355	361	368	375	382	389	395	402
2B5V234	23.4	23.7	342	349	357	364	371	378	386	393	400	408	415	422	429
2B5V200	20	20.3	399	408	416	425	433	442	450	459	467	476	484	493	501
2B5V184	18.4	18.7	434	443	452	461	470	480	489	498	507	517	526	535	544
2B5V160	16	16.3	497	508	519	529	540	550	561	571	582	593	603	614	624
2B5V154	15.4	15.7	516	527	538	549	560	571	582	593	604	615	626	637	648
2B5V136	12.6	12.9	628	642	655	669	682	695	709	722	735	749	762	776	789
2B5V124	12.4	12.7	638	652	666	679	693	706	720	733	747	761	774	788	801
2B5V110	11	11.3	717	733	748	763	779	794	809	824	840	855	870	885	901

15 to 20 HP		MOTOR PULLEY	Dd1	Dd2	Pd1	Pd2									
BX BELTS		2VP75	5.8	7	6.2	7.4									
			Open							TURNS ON MOTOR PULLEY					Closed
BLOWER PULLEY	DATUM DIAMETER	PITCH DIAMETER	6	5 1/2	5	4 1/2	4	3 1/2	3	2 1/2	2	1 1/2	1	1/2	0
2B5V278	27.8	28.1	381	387	393	399	405	411	417	424	430	436	442	448	454
2B5V250	25	25.3	423	430	436	443	450	457	464	470	477	484	491	498	505
2B5V234	23.4	23.7	451	459	466	473	480	488	495	502	509	517	524	531	539
2B5V200	20	20.3	527	535	544	552	561	569	578	586	595	603	612	620	629
2B5V184	18.4	18.7	572	581	590	600	609	618	627	636	646	655	664	673	683
2B5V160	16	16.3	656	667	677	688	698	709	720	730	741	751	762	773	783
2B5V154	15.4	15.7	681	692	703	714	725	736	747	758	769	780	791	802	813
2B5V136	12.6	12.9	829	842	856	869	883	896	909	923	936	949	963	976	990

Troubleshooting

The following table lists causes and corrective actions for possible problems with the fan units. Review this list prior to consulting manufacturer. The following table lists causes and corrective actions for possible problems with the fan units. Review this list before consulting manufacturer.

Airflow Troubleshooting Chart

Problem	Potential Cause	Corrective Action
Fan Inoperative	Blown fuse/Open circuit breaker	Check amperage.
		Check fuse, replace if needed.
		Check circuit breaker.
	Disconnect switch in “OFF” position	Place switch to the “ON” position.
	Incorrect wiring to motor	Inspect motor wiring. Verify connections with wiring diagram located on fan motor.
	Broken fan belt	Replace belt.
	Motor starter overloaded	Check amperage.
		Reset starter.
Motor Overload	Incorrect fan rotation	Verify that the fan is rotating in the direction shown on rotation label.
	Fan speed is too high	Reduce fan RPM.
	Incorrect wiring to motor	Inspect motor wiring. Verify connections with wiring diagram located on fan motor.
	Overload in starter set too low	Set overload to motor’s FLA value.
	Motor HP too low	Determine if HP is sufficient for job.
	Duct static pressure lower than design	Reduce fan RPM.
Insufficient Airflow	Incorrect fan rotation	Verify that the fan is rotating in the direction shown on rotation label.
	Poor outlet conditions	Check duct and connections. There should be a straight duct connection to the outlet.
	Intake damper not fully open	Inspect damper linkage. If the linkage is damaged, replace damper motor.
	Duct static pressure higher than design	Check ductwork. Adjust/resize to eliminate or reduce duct losses.
	Blower speed too low	Increase fan RPM. Do not overload motor.
	Supply grills or registers closed	Open/Adjust.
	Dirty/clogged filters	Clean filters. Replace filters if they cannot be cleaned or are damaged.
	Belt slippage	Adjust belt tension.
Excessive Airflow	Blower speed too high	Reduce fan RPM.
	Filters not installed	Install filters.
	Duct static pressure lower than design	Reduce fan RPM.
Excessive Vibration and Noise	Damaged/Unbalanced wheel	Replace wheel.
	Misaligned pulleys	Align pulleys
	Fan is operating in unstable region of fan curve	Refer to performance curve for fan.
	Bearings need lubrication/Damaged bearing	Lubricate bearings, replace if damaged.
	Fan speed is too high	Reduce fan RPM.
	Dirty/oily belt(s)	Clean belt(s).
	Belt(s) too loose	Adjust, replace if necessary.
	Worn belt(s)	Replace belt(s).

MSC Troubleshooting

Fault	Problem	Potential Cause	Corrective Action
Feedback Fault	Feedback Fault on MSC Display	Disconnected/faulty wiring	Secure connections to fan. If faulty wiring is found, repair or replace as required.
		No feedback for 30 seconds	Check parameters
		Less than 70% of RPM	Check duct/fan for obstructions.
Modbus	Modbus fault on MSC Display	Faulty Cat 5 connection/cable	Find and replace faulty cable
		ECPM03 does not recognize device	Verify Modbus # on device is set correctly.
Variable Device Fault	Motor not responding to changes made on variable device (potentiometer)	Defective potentiometer	Replace potentiometer
		Faulty wiring to motor	Find and replace faulty wiring.
Motor not responding	Motor not functioning as expected	2-Speed switch not working	Check switch and wiring.
		Wiring to motor defective	Find and replace faulty wiring.
		Check for other faults on MSC display	If no other faults are present, motor maybe defective.

TURN OFF POWER TO THE MOTOR WHILE PROGRAMMING THIS DEVICE.

- If the device has a potentiometer or a 2-Speed switch, a jumper wire can be placed in between the 10V In and 10V Out terminals to rule out a defective device. This will cause the motor to go to HIGH SPEED.
- The IO STATUS menu can be used to verify the inputs and outputs of the device are functioning as expected.
- The FAULT HISTORY menu can be used to keep track of faults while working on the device.

MAINTENANCE

To guarantee trouble-free operation of this fan, the manufacturer suggests following these guidelines. Most problems associated with fan failures are directly related to poor service and maintenance.

Please record any maintenance or service performed on this fan in the documentation section located at the end of this manual.

General Maintenance

1. Fan inlet and approaches to ventilator should be kept clean and free from any obstruction.
2. All fasteners and electrical connections should be checked for tightness each time maintenance checks are performed before restarting unit.
3. These units require very little attention when moving clean air. Occasionally oil and dust may accumulate, causing imbalance. If the fan is installed in a corrosive or dirty atmosphere, periodically inspect and clean the wheel, inlet, and other moving parts to ensure smooth and safe operation.
4. Motors are normally permanently lubricated. Check bearings periodically. If they have grease fittings lubricate each season. Use caution when lubricating bearings. Wipe the fittings clean and lubricate the unit while rotating with your hand. **Caution: Use care when touching the exterior of an operating motor. Components may be hot enough to burn or cause injury.**
5. If bearings require lubrication, very little is needed. A general rule is one-half pump from a grease gun for 1/2” to 1-7/16” shaft diameters and one full pump for 1-11/16” and large diameter shafts for every 1500 to 3000 hours of operation. A lithium-based grease should be used. Bearings should be rotated as they are lubricated to evenly distribute the grease, either by hand or via extended grease lines. Do not attempt to grease bearings from inside the enclosure while the motor is energized. **Caution: Bearings are sealed, over-greasing can cause damage to the bearings. Do not grease until grease comes out of seals. Only add the appropriate amount of grease.**

2 Weeks After Start-up

1. Belt tension should be checked after the first 2 weeks of fan operation. **See “Pulley Alignment/ Proper Belt Tension” on page 45.**
2. All fasteners should be checked for tightness each time maintenance checks are performed before restarting unit.

Every 3 Months

1. Belt tension should be checked quarterly. **See “Pulley Alignment/Proper Belt Tension” on page 45.** Over-tightening will cause excessive bearing wear and noise. Too little tension will cause slippage at start-up and uneven wear.
2. Filters need to be cleaned and/or replaced quarterly, and more often in severe conditions. Washable filters can be washed in warm soapy water. When re-installing filters, be sure to install with the **airflow in the correct direction** as indicated on the filter.

Yearly

1. Inspect bearings for wear and deterioration. Replace if necessary.
2. Inspect belt wear and replace torn or worn belts.
3. Inspect bolts and set screws for tightness. Tighten as necessary.
4. Inspect motor for cleanliness. Clean exterior surfaces only. Remove dust and grease and grease from the motor housing to ensure proper motor cooling. Remove dirt and grease from the wheel and housing to prevent imbalance and damage.

Notes

Start-up and Maintenance Documentation

START-UP AND MEASUREMENTS SHOULD BE PERFORMED AFTER THE SYSTEM HAS BEEN AIR BALANCED (Warranty will be void without completion of this form)

Job Information

Job Name		Service Company	
Address		Address	
City		City	
State		State	
Zip		Zip	
Phone Number		Phone Number	
Fax Number		Fax Number	
Contact		Contact	
Purchase Date		Start-up Date	

Fan Unit Information

Refer to the start-up procedure in this manual to complete this section.

Name Plate and Unit Information	
Model Number	
Serial Number	
Volts	
Hertz	
Phase	
FLA	
HP	
Blower Pulley	
Motor Pulley	
Belt Number	

Blower Rotation	
Correct	
Incorrect	

Field Measure Information	
Voltage	
Amperage**	
RPM	

Cleaning and Maintenance

Date	Service Performed	Date	Service Performed

**If measured amps exceed the FLA rating on the nameplate, fan RPM must be reduced to decrease the measured amps below the nameplate FLA rating.

As a result of our dedication to constant improvements and quality, the MANUFACTURER reserves the right to update specifications without notice. Please refer to MANUFACTURER'S website for up to date documentation.

Scan for Online Manual

TAG: EF-2

Power Roof Ventilator/Fans

Installation, Operation, and Maintenance Manual

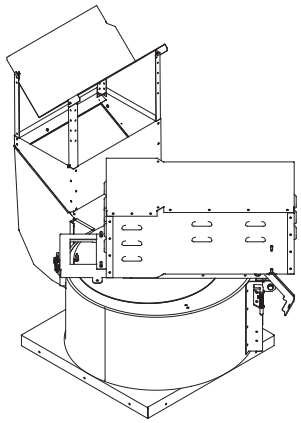

Curb Mount Utility Set

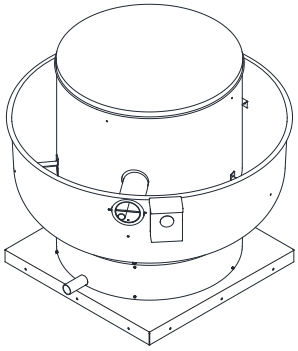

Up-blast Centrifugal Fan

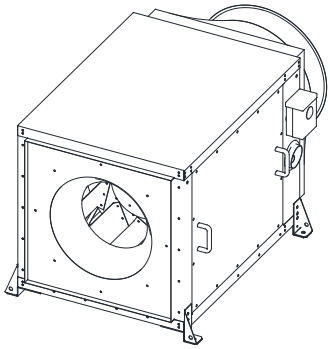

Square Inline

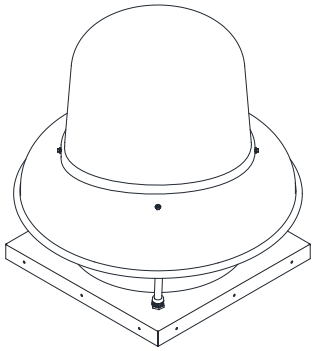

Down-blast Centrifugal Fan

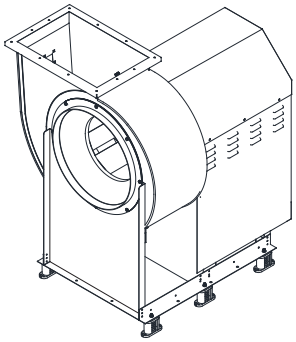

Utility Set

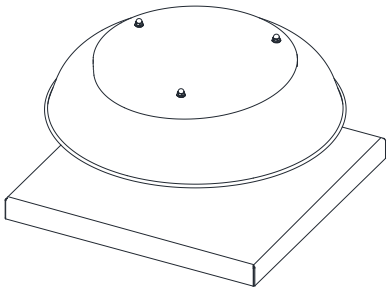

Axial Fan

RECEIVING AND INSPECTION

Upon receiving unit, check for any interior and exterior damage, and if found, report it immediately to the carrier. Check that all accessory items are accounted for and free of damage. Turn the blower wheel by hand to verify free rotation and check the damper (if supplied) operates freely.

WARNING!!

Installation of this ventilator should only be performed by a qualified professional who has read and understands these instructions and is familiar with proper safety precautions. Improper installation poses serious risk of injury due to electric shock, contact with rotating equipment, and other potential hazards. Read this manual thoroughly before installing or servicing this equipment. ALWAYS disconnect power prior to working on fan.

Save these instructions: This document is the property of the owner of this equipment and is required for future maintenance. Leave this document with the owner when installation or service is complete.

Table of Contents

WARRANTY 3
INSTALLATION 4
MECHANICAL 4
- Site Preparation 4
- Roof Mounting 5
- Wall Mounting 5
- Curb and Ductwork 6
- Duct Routing 8
- Up-blast Wall Mount Details 9
- Up-blast Through Wall Mount Details 10
- Up-blast Roof Mount Installation 11
- Down-blast Installation 11
- Typical Hinge Kit - Centrifugal Up-blast 12
- Heavy Duty (HD) Hinge Kit Installation 14
- Heavy Duty (HD) Locking Hinge Kit Installation 16
- Typical Grease Box Installation 18
  - Up-blast Utility Set Installation 19
  - Up-blast Utility Set Inlet Options 20
  - Inlet Service Duct Option 21
  - Up-blast Utility Set 22
  - Up-blast Utility Set Indoor Installation 23
- Up-blast Curb Mounted Utility Set Hinging Instructions 24
- Up-blast Curb Mounted Utility Set Discharge Extension Option 25
- Up-blast Curb Mounted Utility Set Rain Cap Option 25
- Square Inline Mounting Configurations 26
- Square Inline Mounting Bracket Detail 26
- Square Inline Fan Drain 27
- Square Inlet Discharge Options 27
- Square Inline Discharge Configurations 28

ELECTRICAL 29
- Permanent Split Capacitor (PSC) Motor Speed Control 30
- Motorized Intake Damper 30
- Electronically Commutated Motor (ECM) Speed Control 31
  - External PWM Signal 31
- Unit Mount Controller 31
- External PWM Signal 32
- Motor Speed Controller (MSC) Installation 33
- MSC Controls Overview 34
  - MSC Menu 34
  - Input Threshold 36
  - MSC Menu Tree 37
- Fan to Building Wiring Connection 38
- Variable Frequency Drive (VFD) 39
  - Variable Frequency Drive (VFD) Installation 40
  - Input AC Power 40
  - VFD Output Power 40
  - VFD Programming 41
  - ACTECH SMV VFD 42

START-UP OPERATION 43
- Start-up Procedure 43
- Pulley Adjustment 44
- Pulley Alignment/Proper Belt Tension 45
- Bushing Information 46
- Pulley Combination Chart 47
- Troubleshooting 48
  - MSC Troubleshooting 49

MAINTENANCE 50
- General Maintenance 50
- 2 Weeks After Start-up 50
- Every 3 Months 50
- Yearly 50
- Start-up and Maintenance Documentation 52

WARRANTY

This equipment is warranted to be free from defects in materials and workmanship, under normal use and service, for a period of 2-years from date of shipment. This warranty shall not apply if:

1. The equipment is not installed by a qualified installer per the MANUFACTURER'S installation instructions shipped with the product.
2. The equipment is not installed in accordance with Federal, State, or Local codes and regulations.
3. The equipment is misused or neglected, or not maintained per the MANUFACTURER'S maintenance instructions.
4. The equipment is not installed and operated within the limitations set forth in this manual.
5. The invoice is not paid within the terms of the sales agreement.

The MANUFACTURER shall not be liable for incidental and consequential losses and damages potentially attributable to malfunctioning equipment. Should any part of the equipment prove to be defective in material or workmanship within the 2-year warranty period, upon examination by the MANUFACTURER, such part will be repaired or replaced by MANUFACTURER at no charge. The BUYER shall pay all labor costs incurred in connection with such repair or replacement. Equipment shall not be returned without MANUFACTURER'S prior authorization, and all returned equipment shall be shipped by the BUYER, freight prepaid to a destination determined by the MANUFACTURER.

NOTE: To receive warranty coverage for this product, copy and print out the "Start-up and Maintenance Documentation" on page 52. Fill in all details required. Fax the page to 1-919-516-8710 or call 1-866-784-6900 for email information within thirty (30) days of purchase.

INSTALLATION

It is imperative that this unit is installed and operated with the designed airflow and electrical supply in accordance with this manual. If there are any questions about any items, please call the service department at **1-866-784-6900** for warranty and technical support issues.

MECHANICAL

WARNING: DO NOT RAISE VENTILATOR BY THE HOOD, BLOWER OR MOTOR SHAFT, OR BEARINGS – USE LIFTING POINTS PROVIDED OR A SLING.

Site Preparation

1. Provide clearance around installation site to safely rig and lift equipment into its final position. Refer to **Figure 1** for lifting point locations. Supports must adequately sustain equipment. Refer to manufacturer's estimated weights.
2. Consider general service and installation space when locating unit.
3. Locate unit close to the space it will serve to reduce long, twisted duct runs.
4. The fan discharge must be located at least 10 feet away from any supply intakes. The fan discharge shall be in accordance with the applicable building code provisions.
5. Inline fans can be interior mounted, motors shall be located outside of the exhaust air-stream.
6. Interior mounted fans must have a grease drain that is piped to an approved grease reservoir.
7. Interior mounted fans are considered part of the duct system. Clearance to combustibles must always be maintained. If necessary, the fan may be wrapped to maintain the duct system fire rating.

NOTE: Never Lift Fans From Shafts and Bearings.

Figure 1 - Recommended Lifting Points

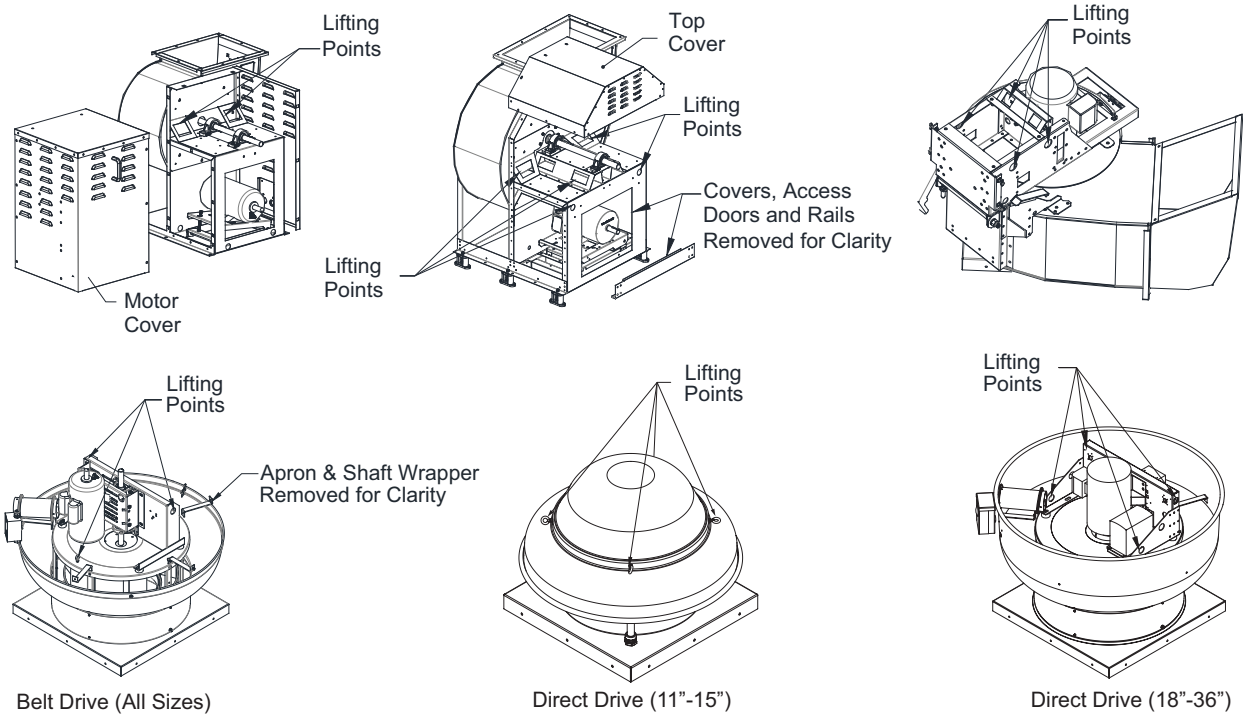

Roof Mounting

Ventilators are designed for installation atop a prefabricated or factory-built roof curb. If an up-blast fan is used for kitchen hood exhaust, ensure discharge is at least 40” above the roof surface in accordance with NFPA 96. Refer to Authority Having Jurisdiction (AHJ) requirements prior to installation. Follow manufacturer’s instructions for proper curb installation.

1. If a back-draft damper is required, it should be secured within the curb using sheet metal screws to the bottom of a damper box or damper support flanges located below the roof deck.

CAUTION: NFPA 96 RECOMMENDS THAT DAMPERS SHOULD NOT BE INSTALLED WHEN EXHAUSTER IS USED FOR REMOVAL OF SMOKE AND GREASE LADEN VAPORS FROM COMMERCIAL KITCHEN EQUIPMENT. CONSULT STATE AND LOCAL CODES FOR DETAILED REQUIREMENTS.

2. On an up-blast fan, normally the power cord is brought through the conduit tube located on the top skirt on the outside of the unit.
3. Curb to substrate installation: Secure curb flange to substrate using suitable hardware (not furnished). Refer to **Table 1** and **Table 2** for hardware details.
4. Fan to curb installation: Use 1/4”-14 x 2” galvanized self-drilling screws. 19” through 40” fan bases use a minimum of 12 screws (3 per side). 44” fan bases use a minimum of 16 screws (4 per side).
5. Before connecting power source to the fan motor, verify power line wiring is de-energized. Check that the power source is compatible with the requirements of your equipment.
6. Connect power supply wiring to the motor as indicated on the motor nameplate or terminal box cover.
7. Before powering up fan, check ventilator wheel for free rotation.
8. Re-install motor cover. Check all fasteners for tightness.
9. A drain pipe is provided for single-point drainage of water and residue on up-blast fans. The drain pipe should be positioned towards the roof slope. Some means for collection of this residue must be provided, either a container directly under the trough or use of an adapter and pipe to carry the residue to a remote collection point. An optional downspout and grease collection box is available as an accessory item for up-blast fans.

Wall Mounting

Refer to Authority Having Jurisdiction (AHJ) requirements prior to installation. Follow manufacturer’s instructions for proper curb installation.

1. The same instructions, warnings, and notes found under Roof Mounting section will apply. Follow steps 1-9 from above, with additional mounting information below.
2. **Masonry Wall/Steel Studs:** Around the wall opening, install an angle iron frame at least 2” x 2” x 1/4”. Frame should be approximately 1/2” smaller than the inside base dimension of the ventilator. For masonry, secure the lead cinch type anchors with non-ferrous bolts (3 per side). For steel, use self-drilling screws (3) per side. The ventilator should be mounted to the mounting angle iron frame with self-tapping sheet metal screws (3 per side).
3. **Wood Sidings:** Around the wall opening, install a wooden frame 2” high x 2” wide. Frame should be approximately 1/2” smaller than the inside base dimension of the ventilator. Secure with counter-sunk expansion type lag bolts (3 per side). The ventilator should then be mounted to the mounting frame with square head wood screws (3 per side) 3/8” minimum.
4. Steel wall mount brackets are also available as a factory option for the fan.
5. The mounting flange connections should be coated with a suitable caulking compound or an approved waterproof mastic sealer.
6. Wall mount application is not recommended for fans greater than 24” wheel with 2 HP motor (1 or 3 phase); 24” wheel with 3 HP motor (3 phase only).

IMPORTANT: OSHA REGULATIONS REQUIRE THE VENTILATOR TO BE MOUNTED AT LEAST EIGHT (8) FEET ABOVE GROUND OR FLOOR LEVEL.

Curb and Ductwork

This fan was specified for a specific CFM and static pressure. The ductwork attached to this unit will significantly affect airflow performance. Flexible ductwork and square elbows should not be used. Also, transitions and turns in ductwork near the fan inlet will cause system effect and will drastically increase the static pressure and reduce airflow. **Follow SMACNA guides and recommendations for the remaining duct run.** Fans designed for rooftop installation should be installed on a prefabricated or factory-built roof curb. Follow curb manufacturer's instructions for proper curb installation.

An example of a curb installation: Curbs should be secured to structural members, such as wooden studs, steel studs, or concrete. The curb should be installed to the roof and/or wall using appropriate type and size fasteners. Refer to **Table 1** for minimum hardware requirements, refer to **Table 2** for quantity per curb flange. Always use suitable fasteners (not furnished) and quantity recommendations.

Refer to **Figure 2** and **Figure 3** for installation details. The fan should be installed on a curb and/or rail. Caulking, flashing and sealing of wall/roof penetration done by contractor or installer.

Verify that the duct connection and fan inlet are properly aligned and sealed. The fan base is secured to the curb with 1/4"-14 x 2" galvanized self-drilling screws. Use a minimum of 12 screws (3 per side) for units with base sizes 19" through 40". Use a minimum of 16 screws (4 per side) for units with a base size of 44". Shims may be required depending upon curb installation and wall/roofing material. Check all fasteners for tightness.

Figure 2 - Curb Mount Details

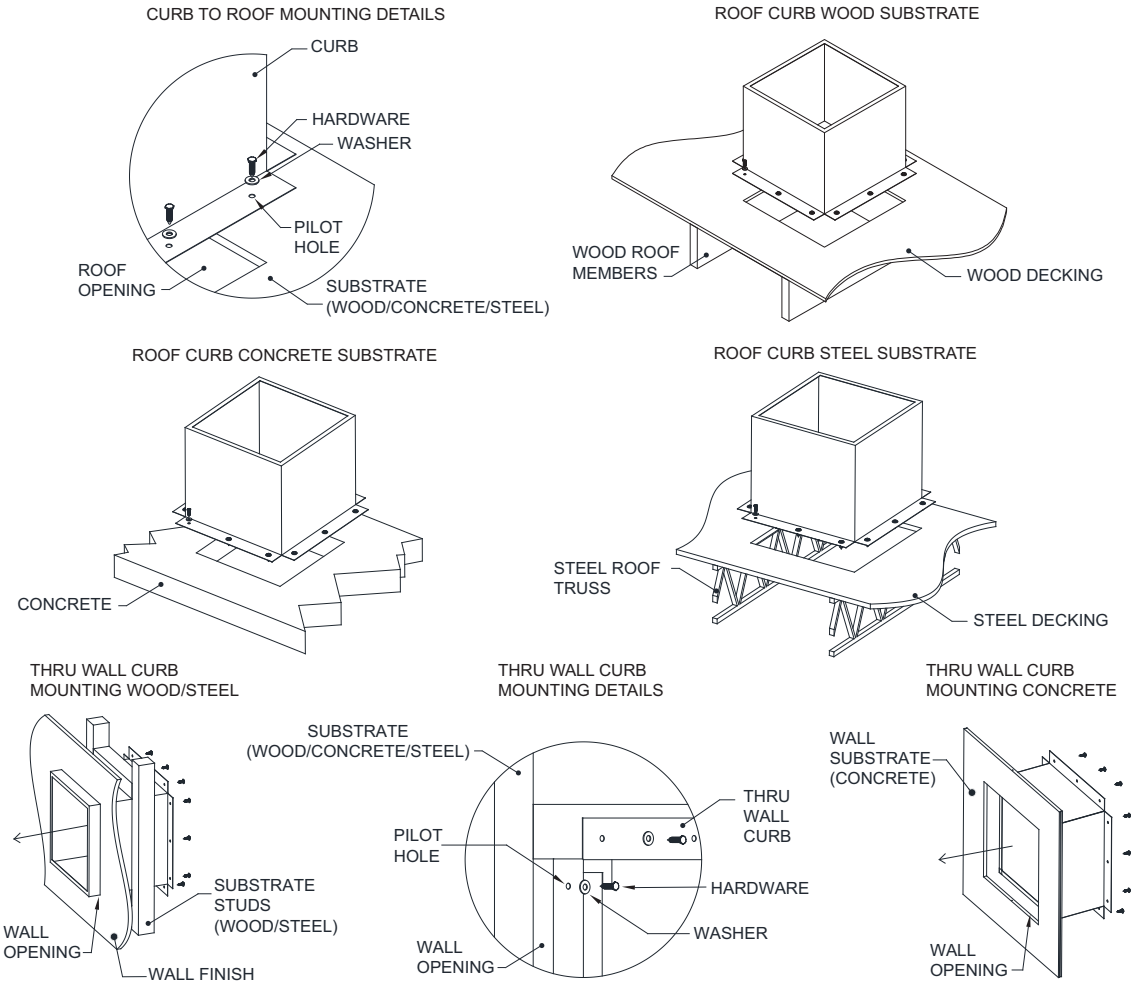

Figure 3 - Minimum Edge Distance and Penetration Details

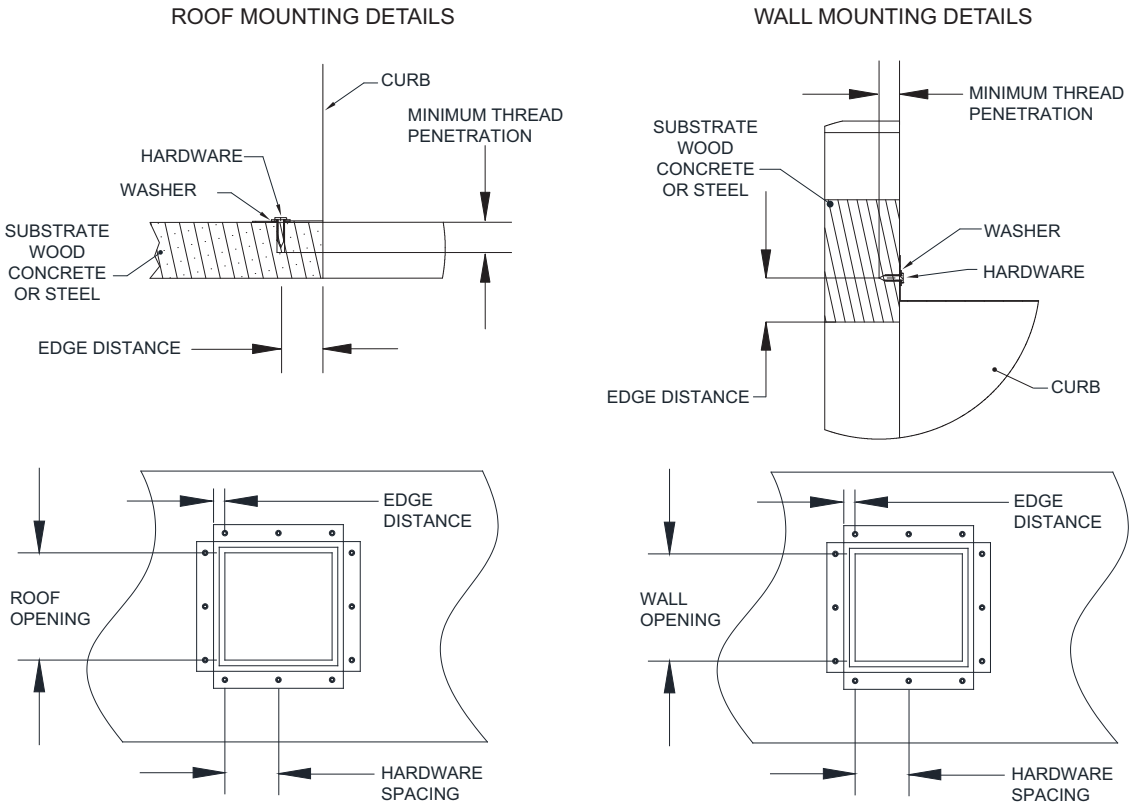

Table 1 - Minimum Hardware Requirements

Material	Minimum Hardware Specifications	Minimum Thread Penetration	Minimum Edge Distance
Wood - Minimum G.42	Zinc Plated Steel Hex Head Lag Screw 3/8" x 2-1/2" with 3/8" washer	2"	1-1/2"
Concrete - 2500 Minimum PSI	Hilti Kwik Bolt 3/8" Diameter TZ Expansion Anchor with 3/8" washer	2-5/16"	3"
Steel (Studs/Roof Truss)	Dril-Flex Self-Drilling Screws 1/4"-14 Min. 1/2" Through with 1/4" washer	12 Gauge or 1/8" Thick	3/8"

Table 2 - Curb to Deck Minimum Fastener Quantity

Fan Base Size	Hardware Quantity Wood	Hardware Quantity Concrete	Hardware Quantity Steel
19"	12 (3 per side)	12 (3 per side)	12 (3 per side)
21"	12 (3 per side)	12 (3 per side)	16 (4 per side)
24-3/4"	16 (4 per side)	16 (4 per side)	20 (5 per side)
26"	20 (5 per side)	20 (5 per side)	24 (6 per side)
28"	20 (5 per side)	20 (5 per side)	24 (6 per side)
33"	24 (6 per side)	24 (6 per side)	28 (7 per side)
40"	28 (7 per side)	28 (7 per side)	36 (8 per side)
44"	40 (10 per side)	36 (9 per side)	44 (11 per side)

NOTE: Fan to Curb Installation: Use 1/4"-14 x 2" self-drilling screws. Use a minimum of 12 screws (3 per side) for 19" through 40" fan bases. Use a minimum of 16 screws (4 per side) for 44" fan bases.

Duct Routing

Figure 4 - Examples of Duct Routing

Proper Duct Routing

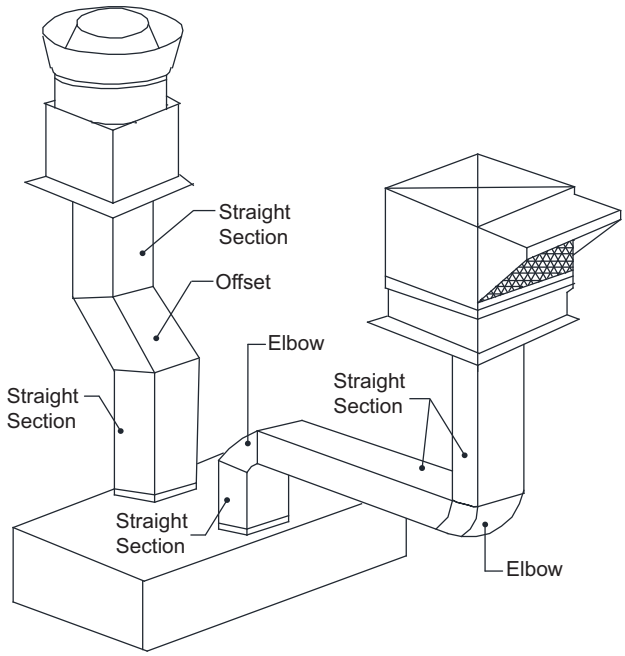

Use offsets if the duct cannot be routed straight up.

Improper Duct Routing

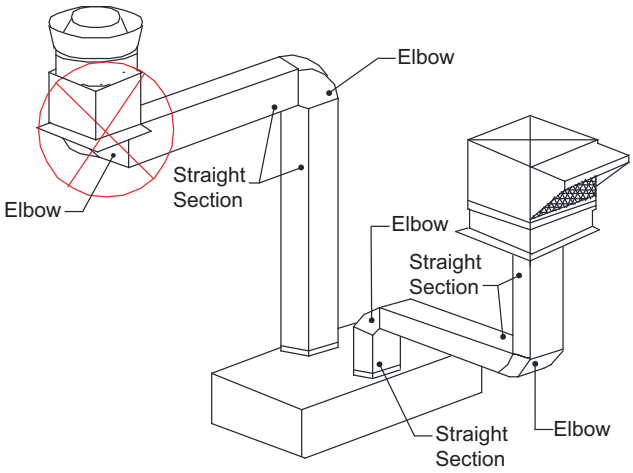

DO NOT connect elbow directly to fan inlet.

Improper Duct Routing

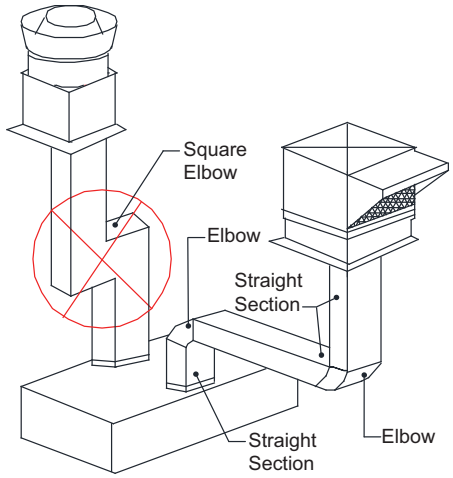

DO NOT use square elbows.

Up-blast Wall Mount Details

Drill pilot holes into the bracket.

Secure wall mount bracket to the wall. Refer to **Table 1** for hardware details.

Use at least (3) suitable fasteners (not furnished) per side.

Wall bracket fits into base of fan.

Use self-drilling screws to attach unit to the wall mount bracket.

* “B” dimension = 5” when used with damper.

** Centered in wall mount.

Figure 5 - Wall Mount Bracket

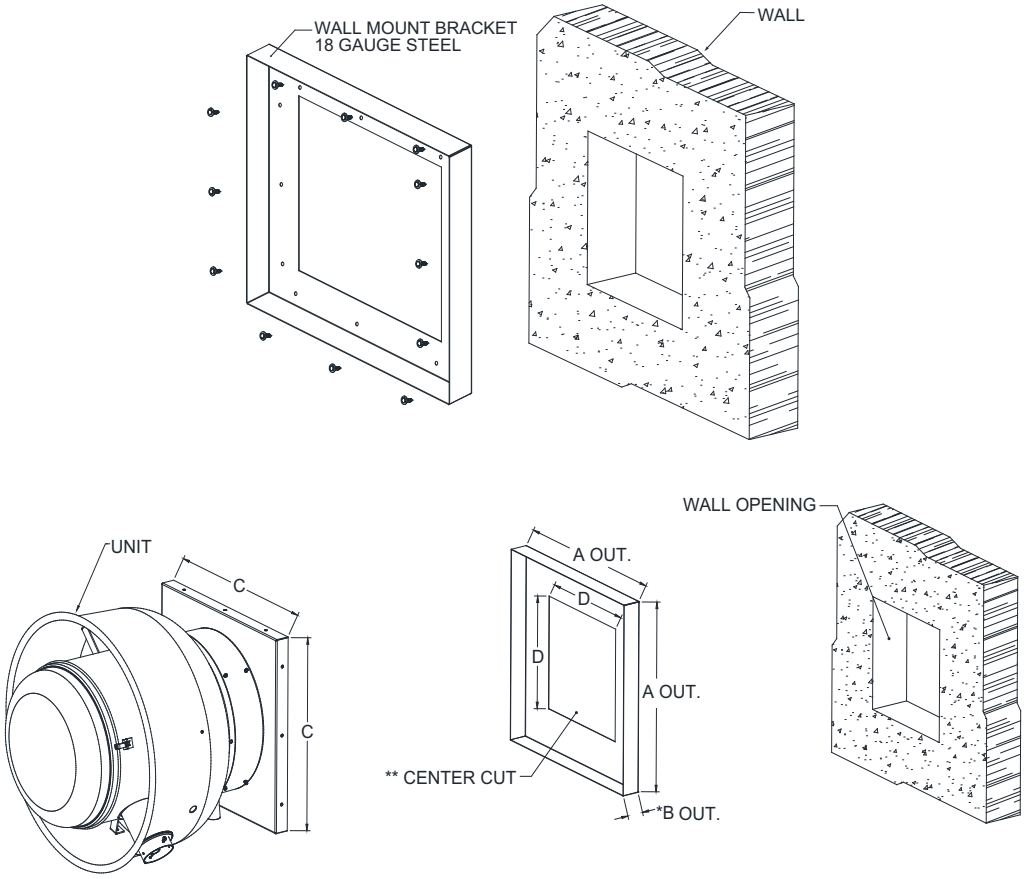

A Outer	B Outer	C	D
18-1/2”	2”	19”	13”
20-1/2”	2”	21”	16”
21-1/2”	2”	22”	16”
24-1/4”	2”	24-3/4”	20”
25-1/2”	2”	26”	20”
27-1/2”	2”	28”	24”
32-1/2”	2”	33”	28”

Up-blast Through Wall Mount Details

Standard curb fits into base of fan.

Refer to **"Curb and Ductwork" on page 6** for curb installation details.

Use self-drilling screws when attaching unit to curb.

Flashing and sealing of wall penetration done by contractor or installer.

For use with fans up to: 24" Wheel 2 HP - 1 Phase Maximum; 24" Wheel 3 HP - 3 Phase Maximum

Figure 6 - Through Wall Mount Details

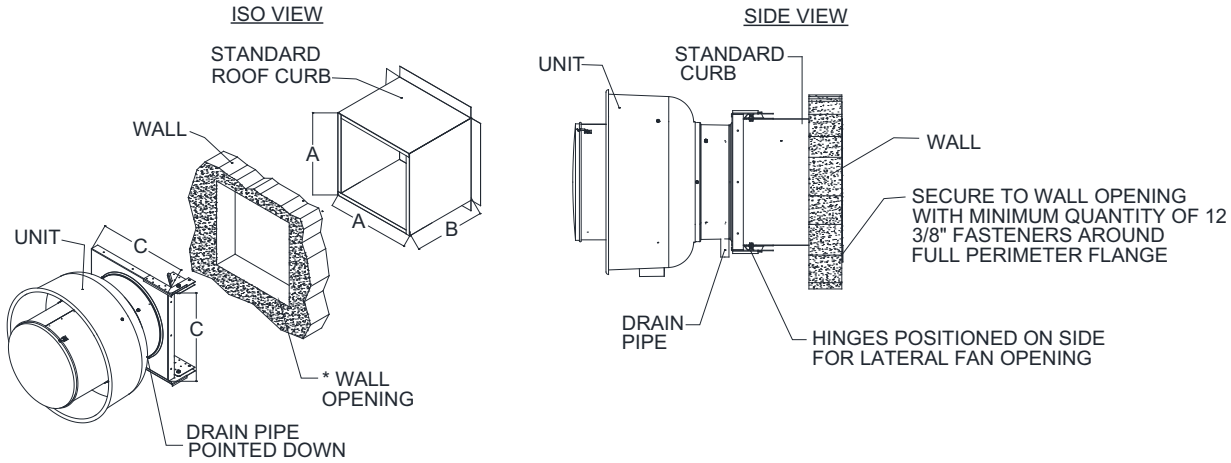

*Contractor or installer must flash wall to curb.

A Dimension	B Dimension	C Dimension
19-1/2"	22"	21"
19-1/2"	20"	21"
23"	20"	24-3/4"
26-1/6	20"	28"
26-1/2"	20"	28"
31-1/2"	20"	33"

Up-blast Roof Mount Installation

Normal temperature test – The exhaust fan must operate continuously while exhausting air at 300°F (149°C) until all fan parts have reached thermal equilibrium, and without any deteriorating effects to the fan which would cause unsafe operation.

Abnormal flare-up test – The exhaust fan must operate continuously while exhausting burning grease vapors at 600°F (316°C) for a period of 15 minutes without the fan becoming damaged to any extent that could cause an unsafe condition.

Pitched curbs are available. Specify pitch when ordering, for example: 7/12 Pitch = 30° Slope

Figure 7 - Up-blast Roof Mount Details

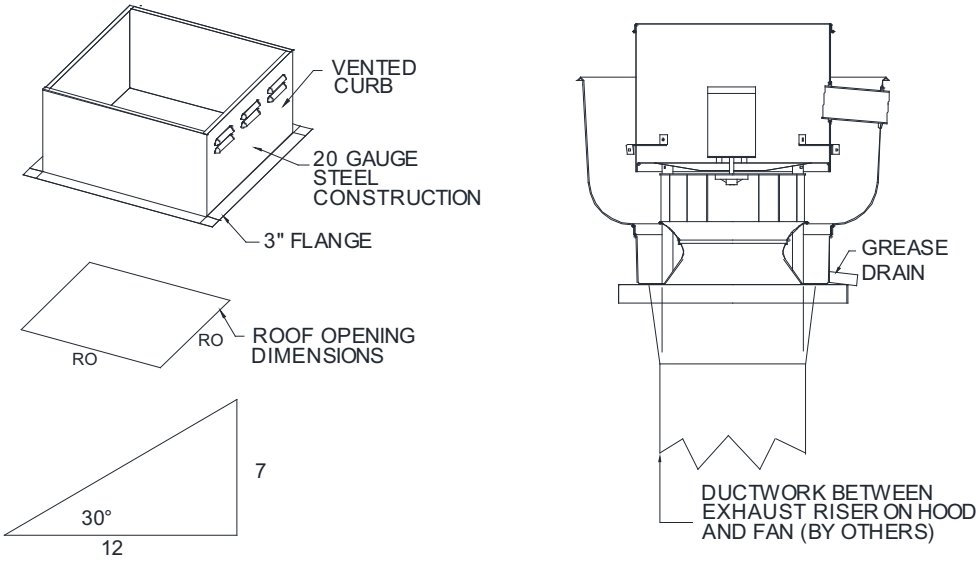

Down-blast Installation

Pitched curbs are available. Specify pitch when ordering, for example: 7/12 Pitch = 30° Slope

Figure 8 - Down-Blast Details

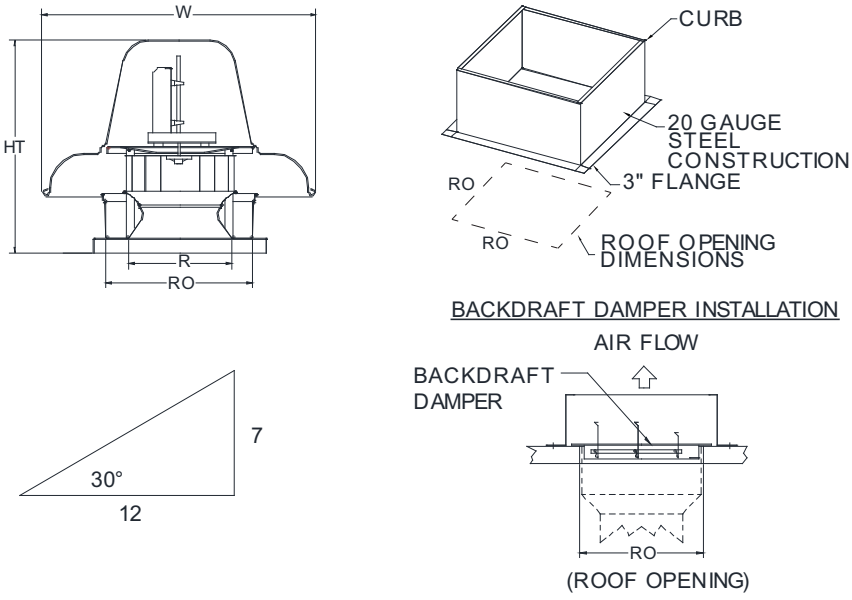

Typical Hinge Kit - Centrifugal Up-blast

Hinge Kit Field Installation

Attention: Installer Must Supply Enough Electrical Cord to Allow the Fan to Swing Open.

1. If parts are not already assembled, refer to **Figure 9** for assembly instructions. Assemble the fan plate and curb plate with hardware, as shown in **Figure 9** Detail “A” and Detail “B”.
2. Line up fan base edge to inside edge of fan plate, as shown in **Figure 9** Detail “C”. Refer to **Figure 10** for positioning fan plate on fan base.
3. Secure the fan plate to the fan base using sheet metal screws (#14 x 3/4” – qty 12). **If the screws interfere with the curb, run the screws from the inside of the fan base**. **Refer to Figure 9 Detail “D”. Verify hardware does not interfere with curb when fan swings open or closed.**
4. Secure the curb plate to the curb using sheet metal screws (#14 x 3/4” – qty 12), **Figure 9** Detail “C”. Verify all parts and hardware are secure and tight. Verify that the fan and base swings open properly, see **Figure 10**.

Parts List

- Left and Right Fan Plates - Quantity 2
- Left and Right Curb Plates - Quantity 2
- Whiz Nuts - Quantity 6
- Whiz Bolts - Quantity 2
- Sheet Metal Screws (#14 x 3/4”) - Quantity 24

Figure 9 - Typical Hinge Kit Fan Plate and Curb Plate Details

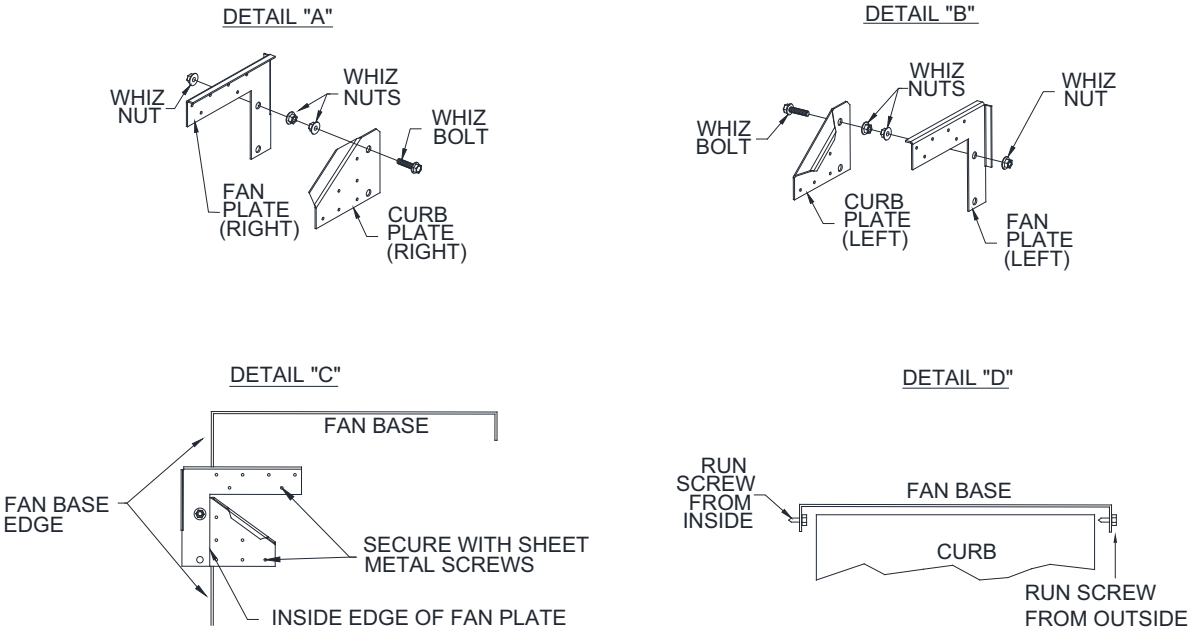

Attention! Installer Must Supply Enough Electrical Cord to Allow the Fan to Swing Open.

Figure 10 - Centrifugal Up-blast Hinge Kit Installation Details

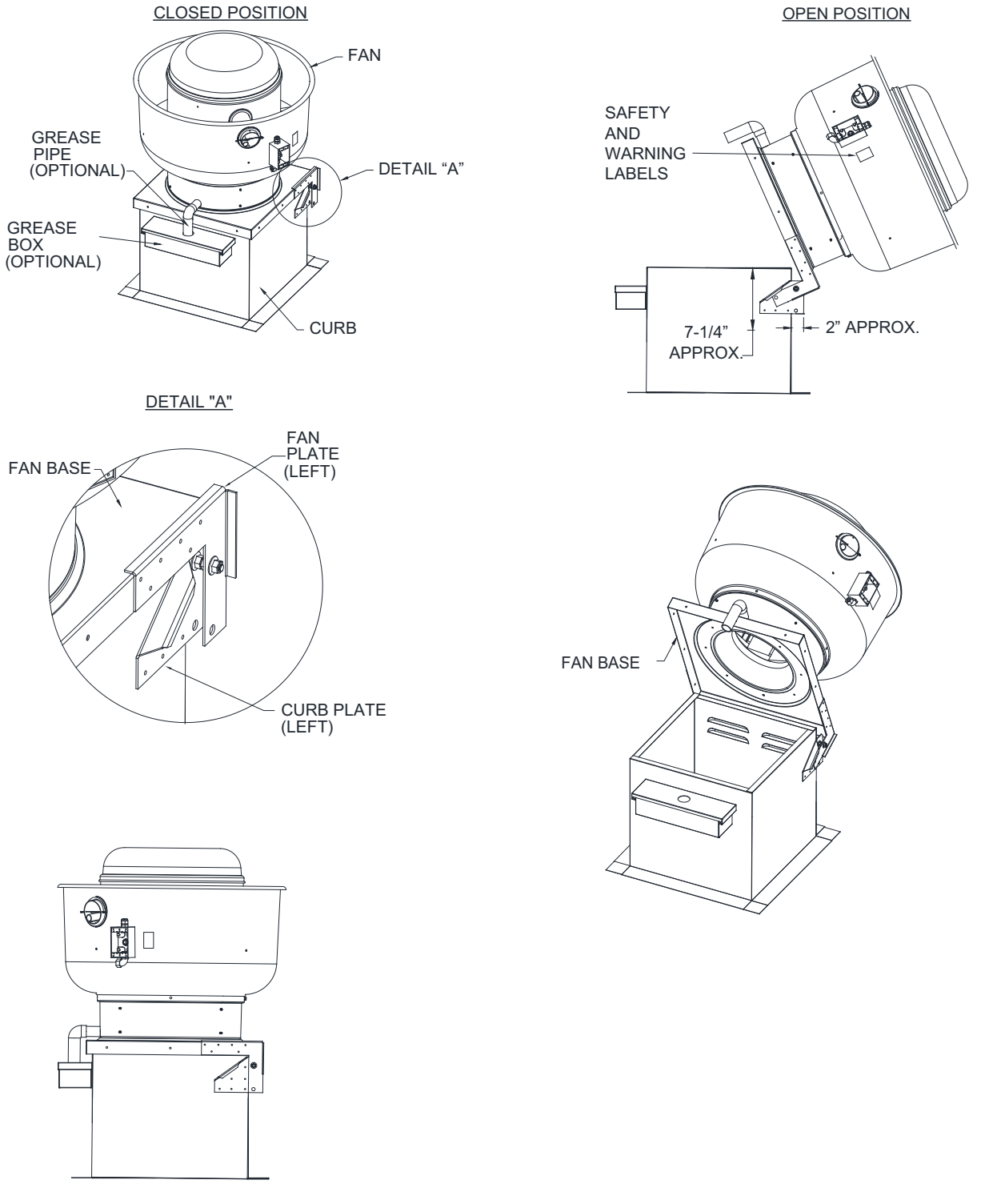

Heavy Duty (HD) Hinge Kit Installation

Hinge Kit Field Installation

Attention: Installer Must Supply Enough Electrical Cord to Allow the Fan to Swing Open.

1. If parts are not already assembled, refer to **Figure 11** for assembly instructions. Assemble the fan plate and curb plate with hardware, as shown in **Figure 11** Detail “A” and Detail “B”.
2. Secure the hinge backplate to the curb with provided hardware, refer to **Figure 12** Detail “B”.
3. Line up fan base edge to inside edge of fan plate, as shown in **Figure 11** Detail “C”. Refer to **Figure 12** detail “A” for positioning fan plate on fan base.
4. Secure the fan plate to the fan base using provided hardware (1/4”-20 – qty 11). **If the screws interfere with the curb, run the screws from the inside of the fan base**. **Refer to Figure 11 Detail “D”. Verify hardware does not interfere with curb when fan swings open or closed.**
5. Secure the curb plate to the curb using provided hardware (1/4”-20 – qty 9), **Figure 11** Detail “C”. Verify all parts and hardware are secure and tight. Verify that the fan and base swings open properly, see **Figure 12**.

Parts List

- Left and Right Fan Plates - Quantity 2
- Left and Right Curb Plates - Quantity 2
- 3/8”-16 Whiz Nuts - Quantity 6
- 3/8”-16 Whiz Bolts - Quantity 2
- 1/4”-20 Whiz Bolts - Quantity 20
- 1/4”-20 Whiz Bolts - Quantity 20

Figure 11 - HD Hinge Kit Fan Plate and Curb Plate Details

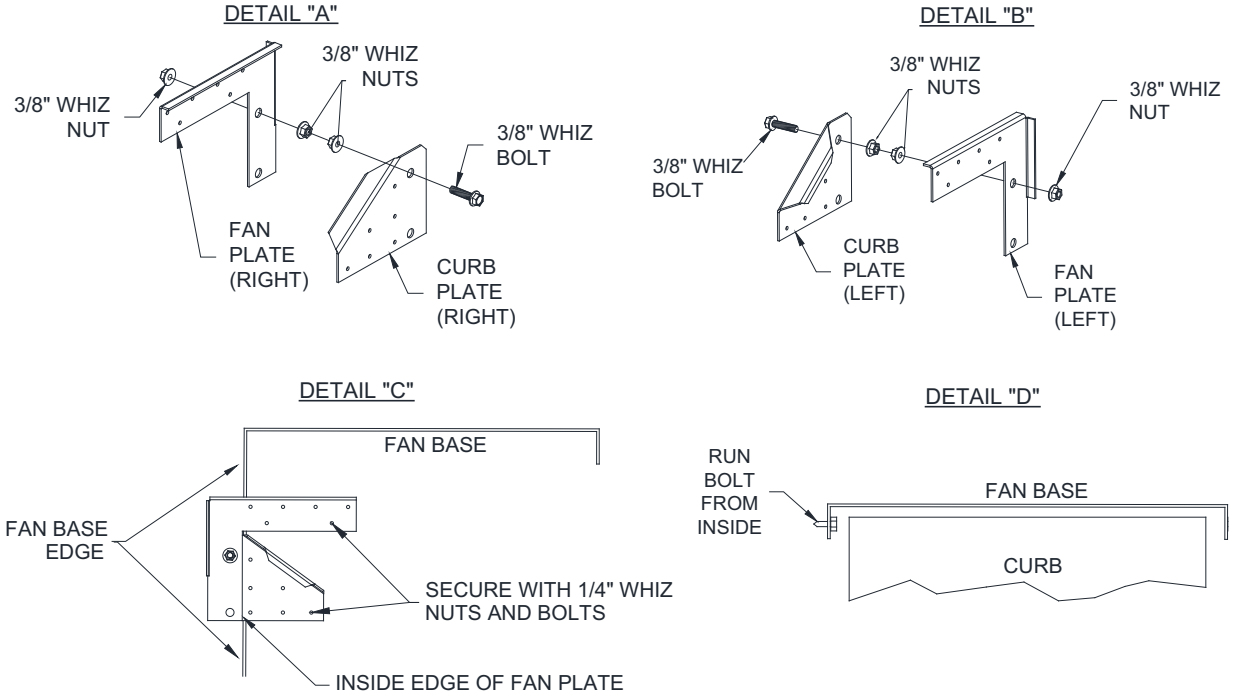

Attention! Installer Must Supply Enough Electrical Cord to Allow the Fan to Swing Open.

Figure 12 - Heavy Duty (HD) Hinge Kit Installation Details

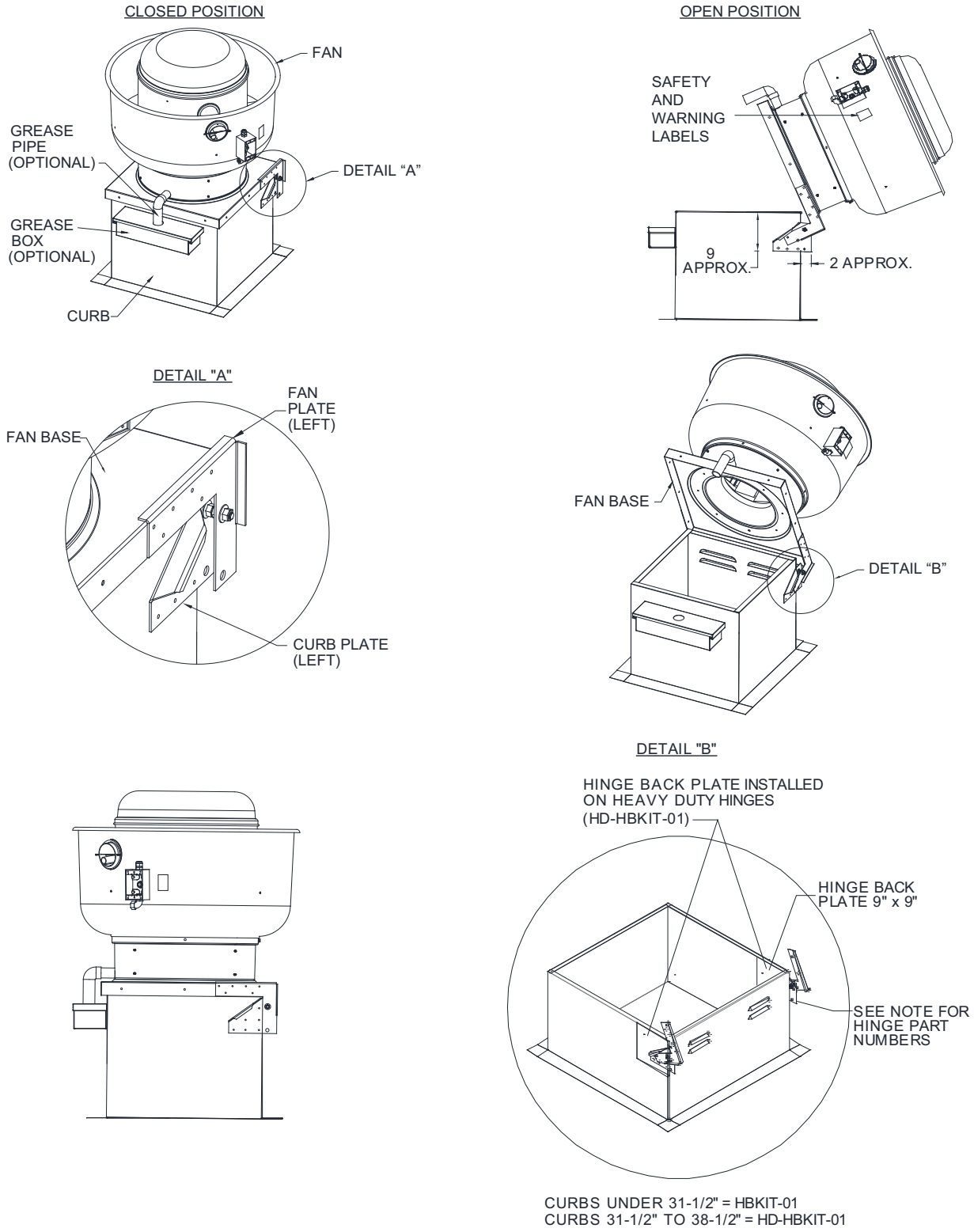

Heavy Duty (HD) Locking Hinge Kit Installation

Hinge Kit Field Installation

Attention: Installer Must Supply Enough Electrical Cord to Allow the Fan to Swing Open.

1. If parts are not already assembled, refer to **Figure 13** for assembly instructions. Assemble the fan plate and curb plate with hardware, as shown in **Figure 13** Detail “A” and Detail “B”.
2. Secure the hinge backplate to the curb with provided hardware, refer to **Figure 14** Detail “B”.
3. Line up fan base edge to inside edge of fan plate, as shown in **Figure 13** Detail “C”. Refer to **Figure 14** detail “A” for positioning fan plate on fan base.
4. Secure the fan plate to the fan base using provided hardware (1/4”-20 – qty 11). **If the screws interfere with the curb, run the screws from the inside of the fan base**. **Refer to Figure 13 Detail “D”. Verify hardware does not interfere with curb when fan swings open or closed.**
5. Secure the curb plate to the curb using provided hardware (1/4”-20 – qty 11), **Figure 13** Detail “C”. Verify all parts and hardware are secure and tight. Verify that the fan and base swings open properly, see **Figure 14**.

Parts List

- Left and Right Fan Plates - Quantity 2
- Left and Right Curb Plates - Quantity 2
- 3/8”-16 Whiz Nuts - Quantity 6
- 3/8”-16 Whiz Bolts - Quantity 2
- 1/4”-20 Whiz Bolts - Quantity 22
- 1/4”-20 Whiz Bolts - Quantity 22

Figure 13 - HD Locking Hinge Kit Fan Plate and Curb Plate Details

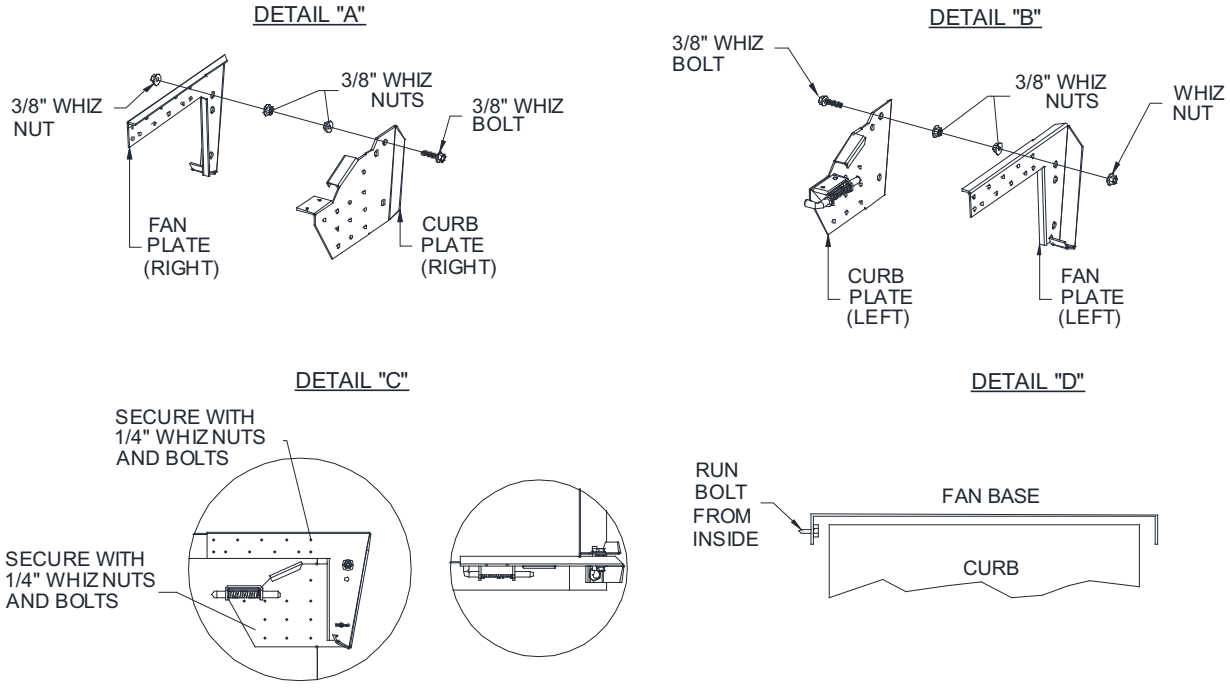

Attention! Installer Must Supply Enough Electrical Cord to Allow the Fan to Swing Open.

Figure 14 - Heavy Duty (HD) Locking Hinge Kit Installation Details

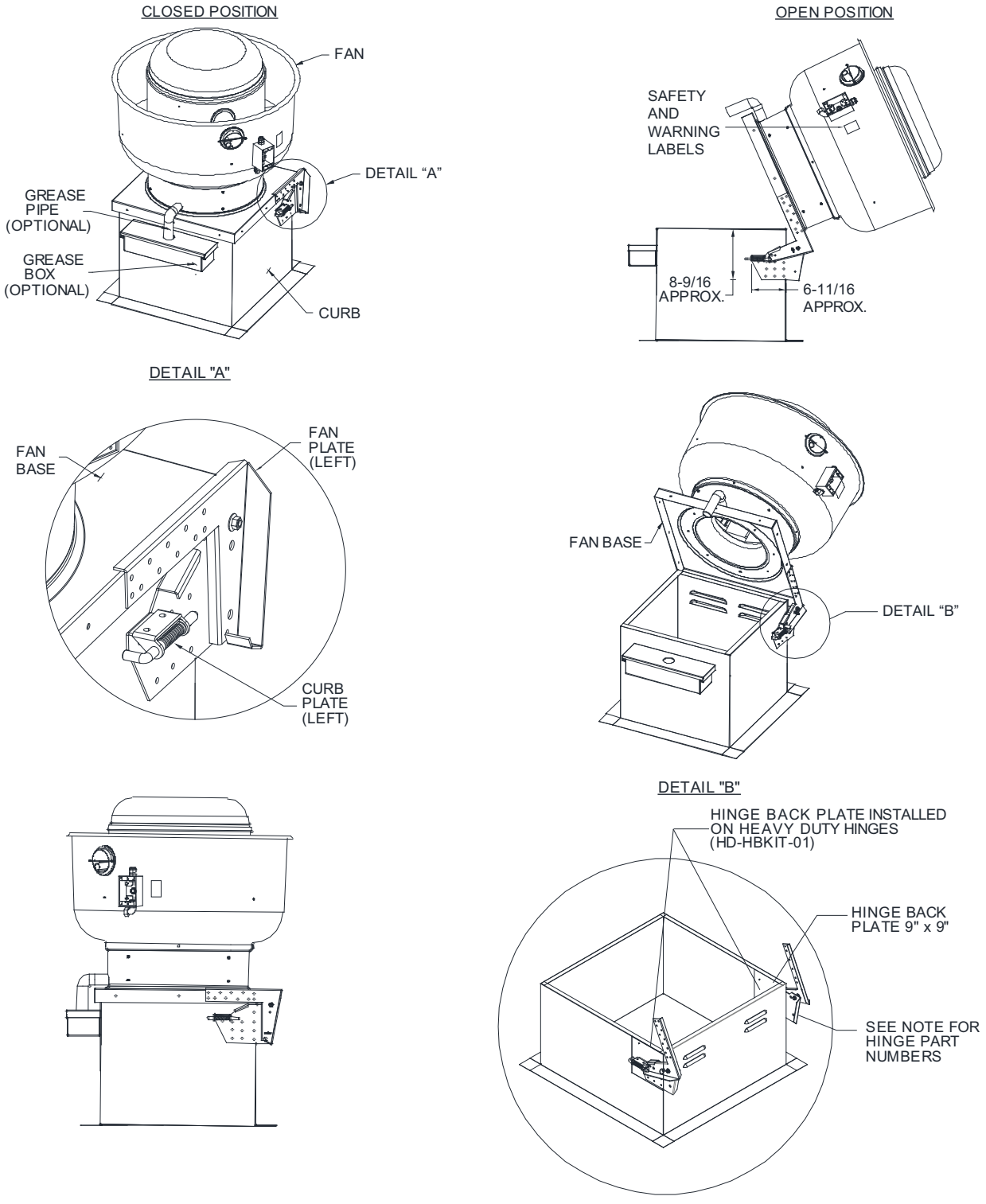

Typical Grease Box Installation

Grease Box Field Installation

1. Mark a mounting location 3” from the top of the curb for the grease box cover. Refer to **Figure 15** Detail “A”.
2. Secure grease box cover to the curb using provided sheet metal screws (qty 3). Refer to **Figure 15** Detail “B”.
3. Slide the grease box into the grease box cover lip. Refer to **Figure 15** Detail “C”.
4. Install grease pipe into grease box cover. Refer to **Figure 15** Detail “D”.

Figure 15 - Typical Grease Box Installation

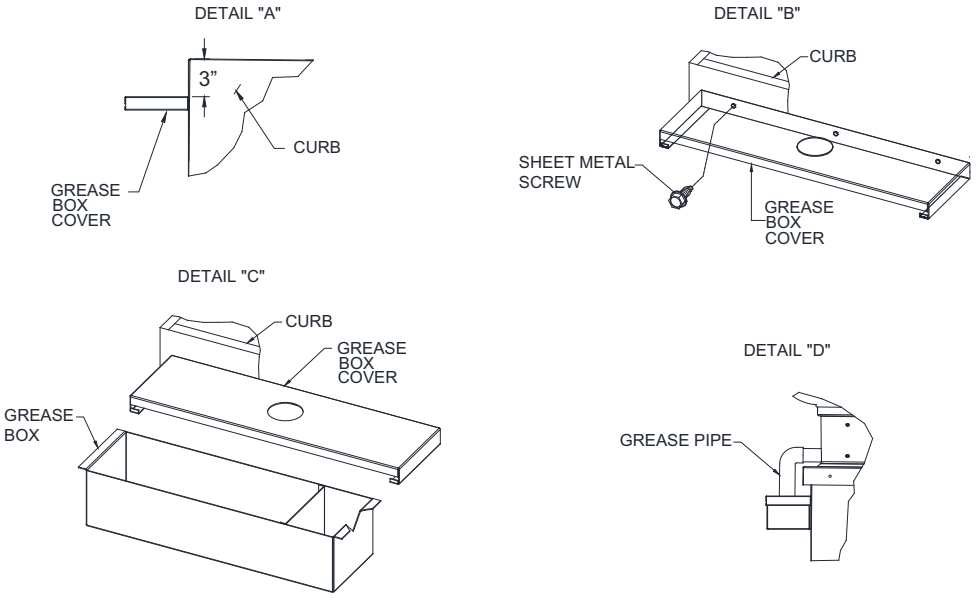

Figure 16 - Grease Box Installed

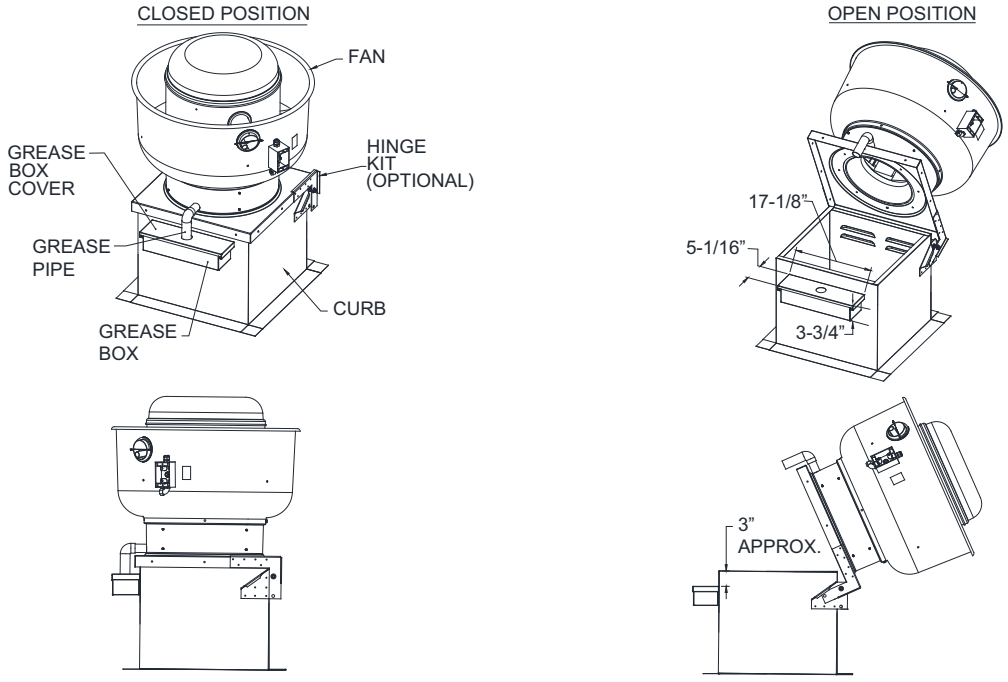

Up-blast Utility Set Installation

Normal temperature test belt drive – The exhaust fan must operate continuously while exhausting air at 350°F (176°C) until all fan parts have reached thermal equilibrium, and without any deteriorating effects to the fan which would cause unsafe operation.

Normal temperature test direct drive – The exhaust fan must operate continuously while exhausting air at 350°F (176°C) until all fan parts have reached thermal equilibrium, and without any deteriorating effects to the fan which would cause unsafe operation.

Direct driveshaft diameter may change due to motor selected Horsepower (HP)/frame size.

Features	Options
Roof Mounted Fans	Grease Box
Restaurant Model	Shaft Seal
UL705 and UL762	Vibration Isolators
High Heat Operation Direct Drive 350°F (176°C)	Extension
High Heat Operation Belt Drive 350°F (176°C)	Inlet Adapters
Heat Slinger	Inlet Riser
Grease Classification Testing	Support Rails
2” Drain	Rain Cap
Motor Weather Cover	
Fully Sealed Scroll Housing	
Scroll Access Door	
Flange 1 = 1/4”-11 through 20”	
Flange 2 = 2”-24 through 36”	

Figure 17 - Up-blast Utility Set Installation

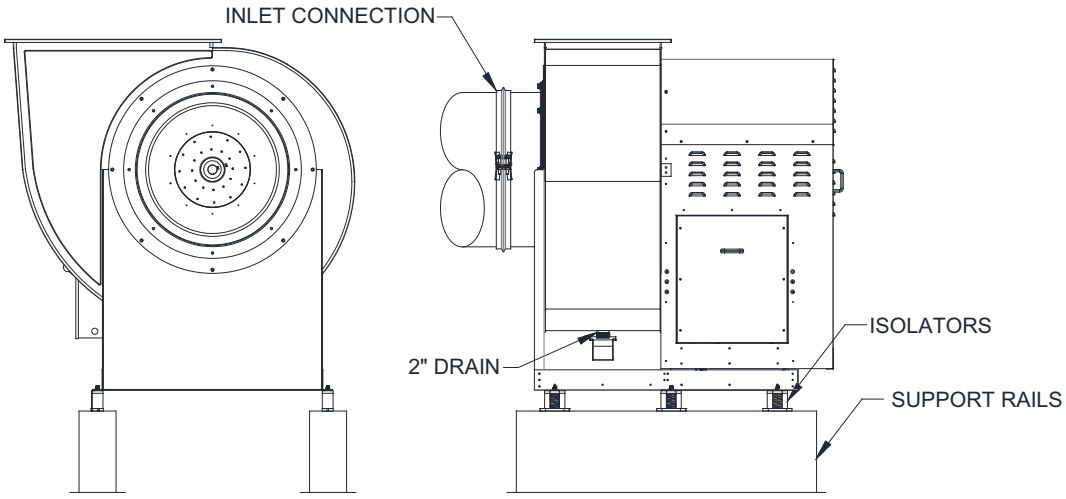

Up-blast Utility Set Inlet Options

Figure 18 - Up-blast Utility Set Inlet Options

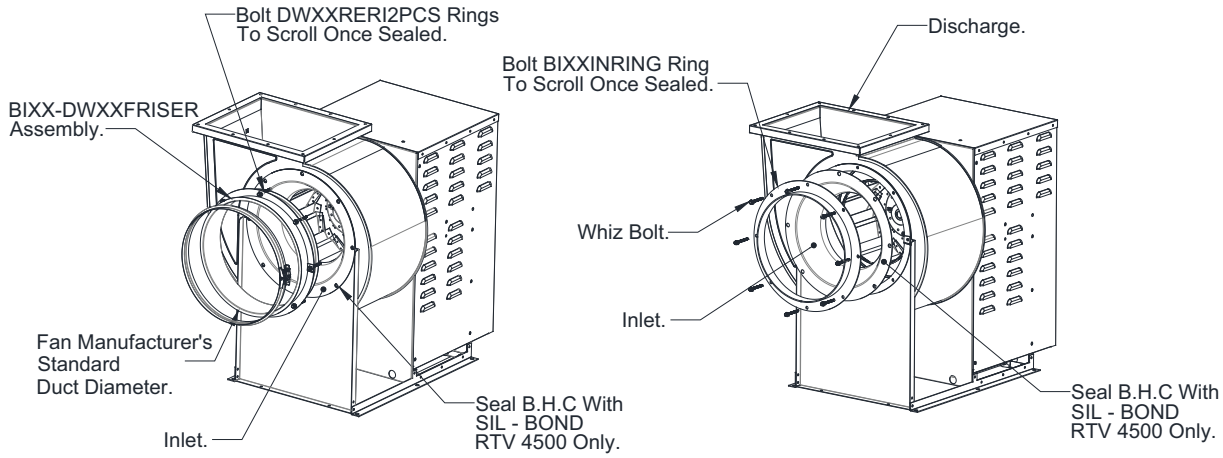

Fan Size	Duct Diameter	Inlet Connection	Inlet Rings	Quantity	Duct Riser	Quantity	Whiz Bolt	Quantity
11	12”	BI11-DW12FRISER	A0028896/ DW12RERI2PCS	2	DW12RISER	1	A0005696/ 1/4”-20 x 1-1/2”	8
13	14”	BI13-DW14FRISER	A0028897/ DW14RERI2PCS	2	DW14RISER	1	A0005696/ 1/4”-20 x 1-1/2”	8
15	16”	BI15-DW16FRISER	A0028898/ DW16RERI2PCS	2	DW16RISER	1	A0005696/ 1/4”-20 x 1-1/2”	8
18	20”	BI18-DW20FRISER	A0028900/ DW20RERI2PCS	2	DW20RISER	1	A0005696/ 1/4”-20 x 1-1/2”	8
20	20”	BI20-DW20FRISER	A0028901/ DW20RERIUSBI202PCS	2	DW20RISER	1	A0005696/ 1/4”-20 x 1-1/2”	8
24	24”	BI24-DW24FRISER	A0028904/ DW24RERIUSBI242PCS	2	DW24RISER	1	A0005678/ 3/8”-16 x 1-1/2”	8
30	24”	BI30-DW24FRISER	A0028905/ DW24RERIUSBI302PCS	2	DW24RISER	1	A0005678/ 3/8”-16 x 1-1/2”	8
36	30”	BI36-DW30FRISER	A0030879/ DW30RERIUSBI362PCS	2	DW30RISER	1	A0005678/ 3/8”-16 x 1-1/2”	8
11	12”	A0023766/BI11INRING	N/A		N/A		A0005696/ 1/4”-20 x 1-1/2”	8
13	14”	A0023767/BI13INRING	N/A		N/A		A0005696/ 1/4”-20 x 1-1/2”	8
15	16”	A0023768/BI15INRING	N/A		N/A		A0005696/ 1/4”-20 x 1-1/2”	8
18	20”	A0023769/BI18INRING	N/A		N/A		A0005696/ 1/4”-20 x 1-1/2”	8
20	20”	A0023770/BI20INRING	N/A		N/A		A0005696/ 1/4”-20 x 1-1/2”	8
24	24”	A0023771/BI24INRING	N/A		N/A		A0005678/ 3/8”-16 x 1-1/2”	8
30	24”	A0023772/BI30INRING	N/A		N/A		A0005678/ 3/8”-16 x 1-1/2”	8
36	30”	A0023773/BI36INRING	N/A		N/A		A0005678/ 3/8”-16 x 1-1/2”	8

Inlet Service Duct Option

Service duct kits allow a quick disconnect between the fan inlet and duct system.

1. Service duct kits come with (2) 7” long duct sections, (8) riser rings, and installation hardware.
2. Service duct flanges must be sealed with 3M Barrier 2000+.
3. Once sealed, the service duct is secured using bolt together riser rings.
4. The first 7” long duct section can be welded directly to existing duct systems.
5. If connecting to fan Manufacturer’s factory duct, the first 7” long duct section may or may not be used. You may connect fan Manufacturer’s standard duct directly to service duct using V-bands.

Figure 19 - Inlet Service Duct Option

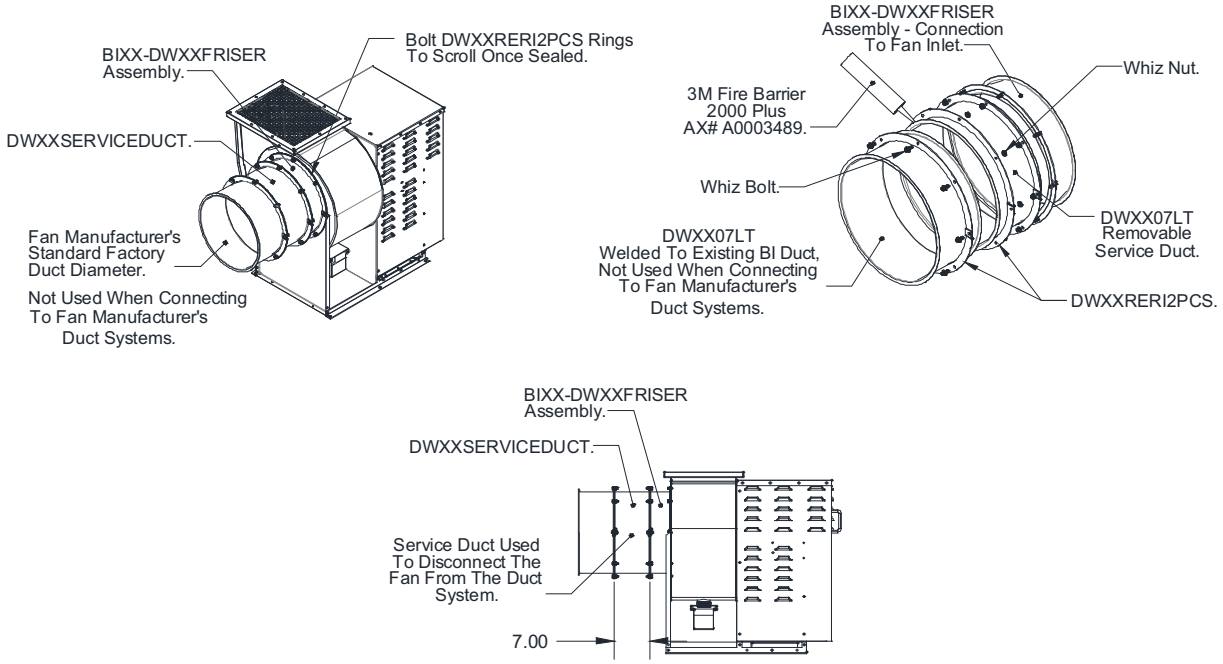

Fan Size	Duct Diameter	Inlet Connection Assembly	Duct LT	Quantity	Riser Rings	Quantity	Whiz Bolt (Inches)	Quantity	Whiz Nut (Inches)	Quantity
11	12”	12SERVICEDUCTKIT	DW1207LT	2	A0028896/ DW12RERI2PCS	8	A0023684/ 1/4”-20 x 1”	16	A005690/ 1/4”-20	16
13	14”	14SERVICEDUCTKIT	DW1407LT	2	A0028897/ DW14RERI2PCS	8	A0023684/ 1/4”-20 x 1”	16	A005690/ 1/4”-20	16
15	16”	16SERVICEDUCTKIT	DW1607LT	2	A0028898/ DW16RERI2PCS	8	A0023684/ 1/4”-20 x 1”	16	A005690/ 1/4”-20	16
18	20”	20SERVICEDUCTKIT	DW2007LT	2	A0028900/ DW20RERI2PCS	8	A0023684/ 1/4”-20 x 1”	16	A005690/ 1/4”-20	16
20	20”	20SERVICEDUCTKIT	DW2007LT	2	A0028900/ DW20RERI2PCS	8	A0023684/ 1/4”-20 x 1”	16	A005690/ 1/4”-20	16
24	24”	24SERVICEDUCTKIT	DW2407LT	2	A0028903/ DW24RERI2PCS	8	A0023684/ 1/4”-20 x 1”	16	A005690/ 1/4”-20	16
30	24”	24SERVICEDUCTKIT	DW2407LT	2	A0028903/ DW24RERI2PCS	8	A0023684/ 1/4”-20 x 1”	16	A005690/ 1/4”-20	16
36	30”	30SERVICEDUCTKIT	DW3007LT	2	A0030878/ DW36RERI2PCS	8	A0024297/ 3/8”-16 x 1”	16	A005688/ 3/8”-16	16

Up-blast Utility Set

Figure 20 - Discharge Extension Options

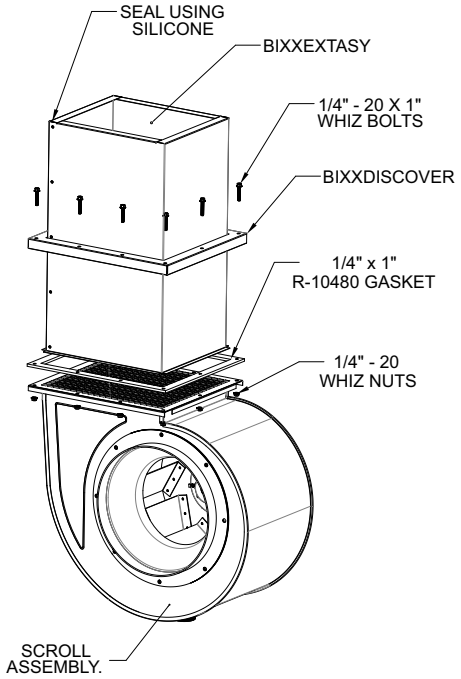

Hardware Counts	
Hardware # Bolt/Nut	**Hardware Quantity**
1/4”-20 x 1” (92323A518)/1/4”-20 (94831A029)	8
1/4”-20 x 1” (92323A518)/1/4”-20 (94831A029)	8
1/4”-20 x 1” (92323A518)/1/4”-20 (94831A029)	8
1/4”-20 x 1” (92323A518)/1/4”-20 (94831A029)	12
1/4”-20 x 1” (92323A518)/1/4”-20 (94831A029)	12
1/4”-20 x 1” (92323A518)/1/4”-20 (94831A029)	12
1/4”-20 x 1” (92323A518)/1/4”-20 (94831A029)	12
1/4”-20 x 1” (92323A518)/1/4”-20 (94831A029)	14

BI - Discharge Extension					
Fan Size	**Extension #**	**L**	**W**	**H**	**Cover #**
11	BI11EXTASY	12”	11”	24”	BI11DISCOVER
13	BI13EXTASY	14”	12”	24”	BI13DISCOVER
15	BI15EXTASY	16”	13”	24”	BI15DISCOVER
18	BI18EXTASY	19”	15”	24”	BI18DISCOVER
20	BI20EXTASY	21”	15”	24”	BI20DISCOVER
24	BI24EXTASY	26”	17”	24”	BI24DISCOVER
30	BI30EXTASY	32”	19”	24”	BI30DISCOVER
36	BI36EXTASY	39”	23”	24”	BI26DISCOVER

Up-blast Utility Set Indoor Installation

Some situations prevent the installation of exhaust fans on the roof or other outdoor location. An indoor installation may be the only alternative.

Of the various types of fans that might be employed, utility sets seem most appropriate because they readily accommodate the inlet and outlet duct connections. Fans designed for curb mounting would present outlet duct connection difficulties.

Most Authority Having Jurisdictions (AHJs) comply with IMC, NFPA 96 and UL 762 standards. Standard UL 762, “Power Roof Ventilators for Restaurant Exhaust Appliances”, covers the utility set high temperature and grease fire testing. NFPA 96 “Standard for Ventilation Control and Fire Protection of Commercial Cooking Operations” covers the installation of the duct connections to the inlet and out of the exhaust fan.

Standard UL 762:

This standard has two primary tests. The first test has the fan exhaust air for several hours at the maximum temperature the manufacturer wishes to list the fan, such as 300°F. The second part imitates a grease fire by igniting grease in a pan near an inlet duct. If the fan keeps running and does not display any unsafe results, it passes those tests. They also examine the fan for any characteristics that might be unsuitable.

In the scope of section 1.1, it states “these requirements cover roof or wall-mounted ventilators for restaurant exhaust appliances.” It would seem at first that the phrase “roof or wall mounted” would preclude applicability of the label indoors. However, in the very next paragraph it goes on to say, “Power ventilators…covered by these requirements are intended for installation in accordance with … NFPA 96”. NFPA 96 clearly defines how to install a traditional ventilator indoors.

Standard NFPA 96 – 8.1.4* Utility Set Exhaust Fans.

8.1.4.2 Utility set exhaust fans installed within the building shall be located in an accessible area of adequate size to allow for service or removal.

8.1.4.3 Where the duct system connected to the fan is in an enclosure, the space or room in which the exhaust fan is located shall have the same fire resistance rating as the enclosure.

8.1.4.4 The fan shall be connected to the exhaust duct by flanges securely bolted, as shown in Figure 8.1.3.2 (a) through Figure 8.1.3.2 (d) or by a system specifically listed for such use, such as UL 1978 or UL 2221 listed duct systems.

8.1.4.5 Flexible connectors shall not be used.

8.1.4.6 Exhaust fans shall have a drain directed to a readily accessible and visible grease receptacle not to exceed 3.8 L (1 gallon).

Manufacturer Recommendations for Indoor Installation:

1. The fan inlet and outlet must be connected to the ducts using companion flanges and high temperature (1500F) gaskets or by a system specifically listed for such use, such as UL 1978 or UL 2221 listed duct systems.
2. Install the fan where there is room for service and removal.
3. Usually, the duct to the fan is in a shaft, and the shaft walls have a fire resistance rating. The space where the fan is located must have the same fire resistance rating as the shaft.
4. Flexible connectors are not allowed.
5. There must be a drain in the fan that is directed to a readily accessible and visible grease receptacle, ideally piped to the building grease trap.
6. The exhaust housing constructed of carbon steel not less than 1.52 mm (.060 in.), unless listed in accordance with the terms of the listing.
7. Inlet and outlet ducts will have access doors installed 3 feet from the fan for service and maintenance.
8. Minimum clearances are 18” inches to combustible, 3” inches to limited, 0” inches to non-combustibles.
9. All wiring and electrical equipment must comply with NFPA 70, National Electrical Code.

Up-blast Curb Mounted Utility Set Hinging Instructions

1. Turn the disconnect switch to the off position.
2. Turn and release the latch from the power pack handle.
3. Lift the power pack using the front handle.
4. The power pack will tilt back 65 degrees.
5. The power pack latch will automatically engage the spring pin.
6. To close the power pack, hold the lifting handle and pull the spring pin up.
7. Lower the power pack down.
8. Engage the front latch into the lifting handle and twist to lock.
9. Inspect the power pack. Top plate should be sealed with top gasket.
10. Turn the wheel to make sure there is not any interference.

NOTE: Utility sets may not be wall mounted.

Figure 21 - Up-blast Curb Mounted Utility Set Hinge

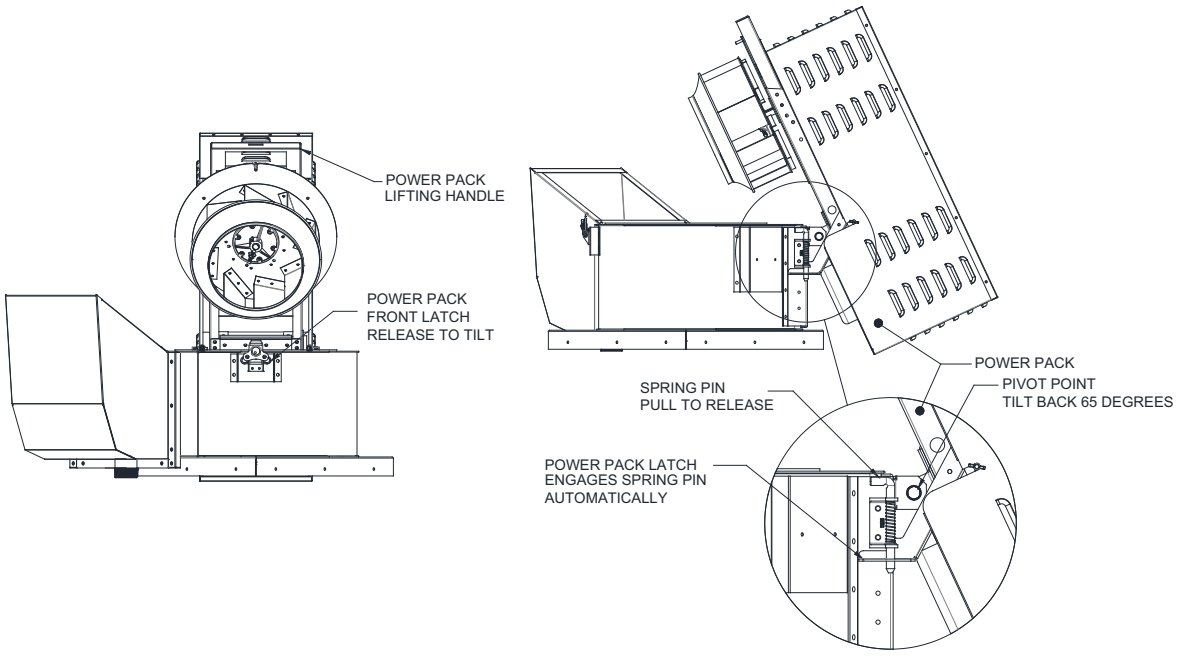

Up-blast Curb Mounted Utility Set Discharge Extension Option

Figure 22 - Discharge Extension Option

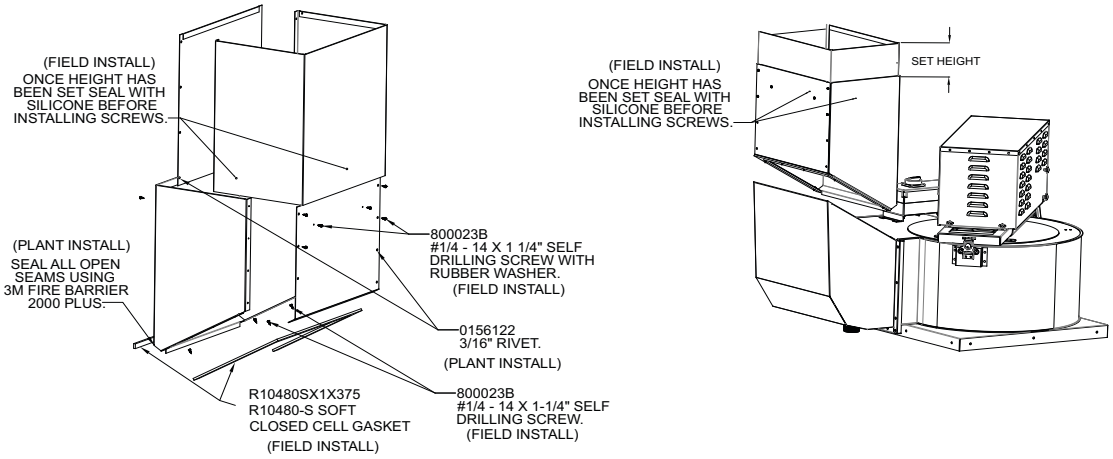

Utility Set Option - Extension Assembly	
Part Number	**Description**
RE13ADJEXTASY	RE13 - Extension Assembly Option
RE15ADJEXTASY	RE15 - Extension Assembly Option
RE18ADJEXTASY	RE18 - Extension Assembly Option
RE20ADJEXTASY	RE20 - Extension Assembly Option
RE24ADJEXTASY	RE24 - Extension Assembly Option

Up-blast Curb Mounted Utility Set Rain Cap Option

Figure 23 - Rain Cap Option

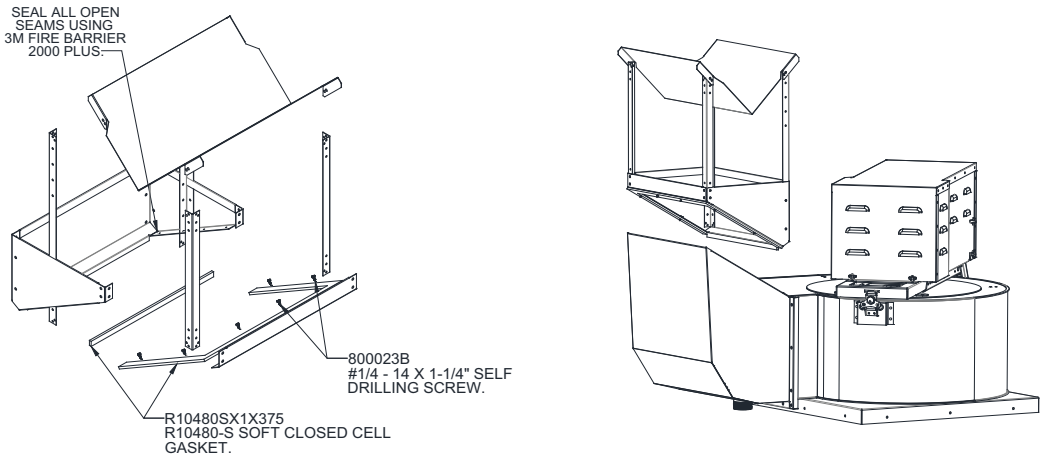

Utility Set Option - Rain Cap Assembly	
Part Number	**Description**
RE11RAINCAP ASSY	RE11 - Extension Assembly Option
RE13RAINCAP ASSY	RE13 - Extension Assembly Option
RE15RAINCAP ASSY	RE15 - Extension Assembly Option
RE18RAINCAP ASSY	RE18 - Extension Assembly Option
RE20RAINCAP ASSY	RE20 - Extension Assembly Option
RE24RAINCAP ASSY	RE24 - Extension Assembly Option

Square Inline Mounting Configurations

IMPORTANT: Models containing cooling tubes and drains should not be mounted vertically. Drains must be oriented in the 6 o'clock position.

Figure 24 - Mount Configurations

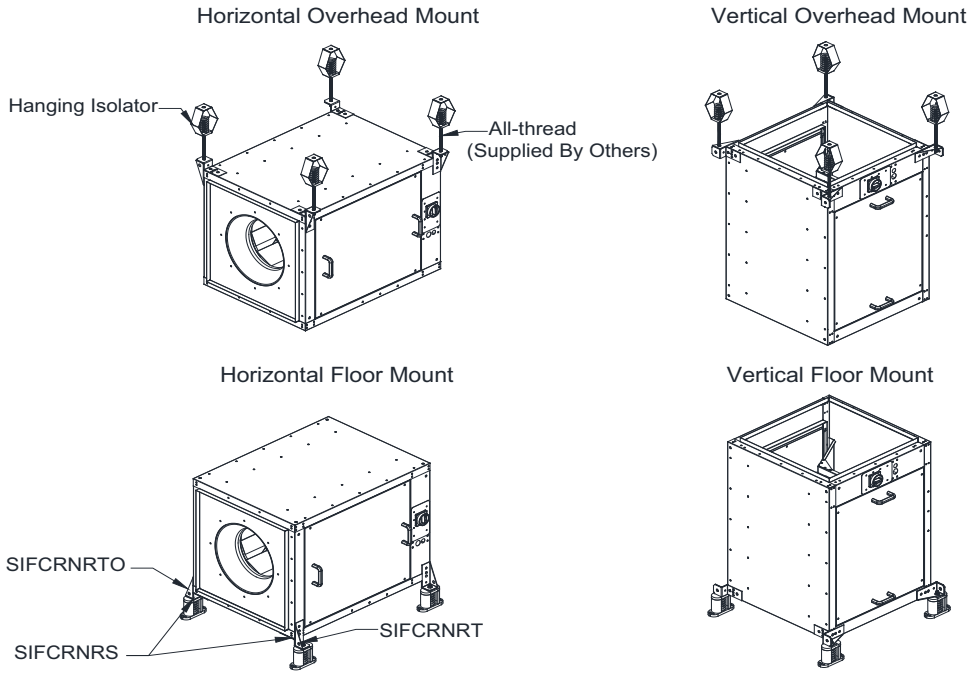

Square Inline Mounting Bracket Detail

Figure 25 - Square Inline Mount Details

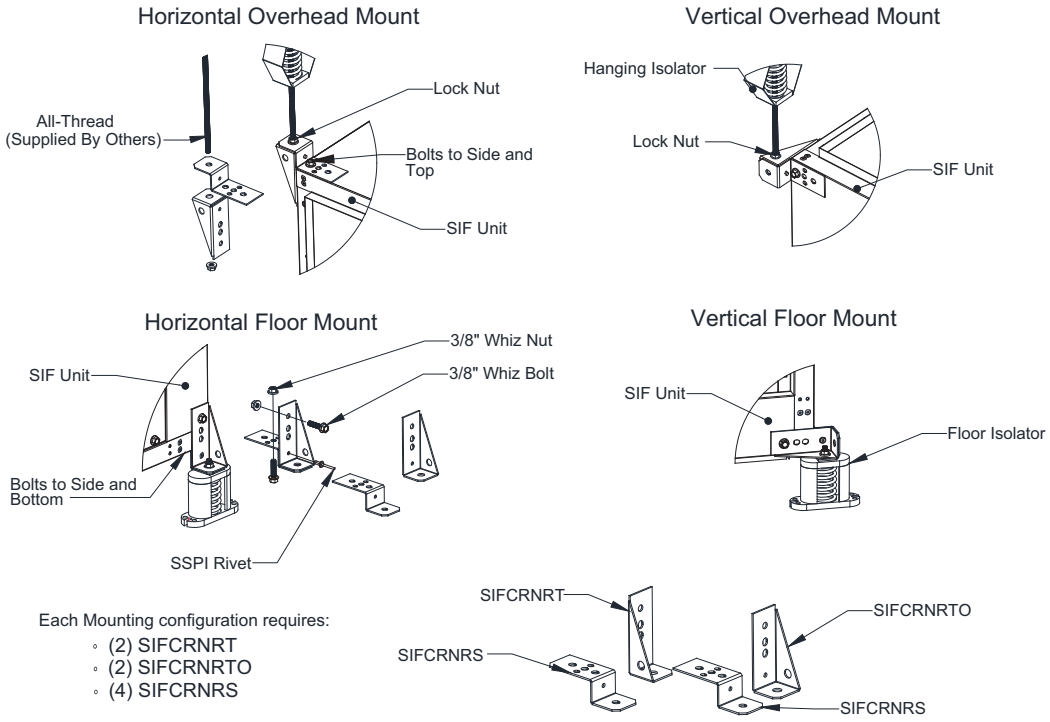

Each Mounting configuration requires:

- (2) SIFCRNRT
- (2) SIFCRNRTO
- (4) SIFCRNRS

Square Inline Fan Drain

Figure 26 - Direct Drive Stainless Steel Inline Fans

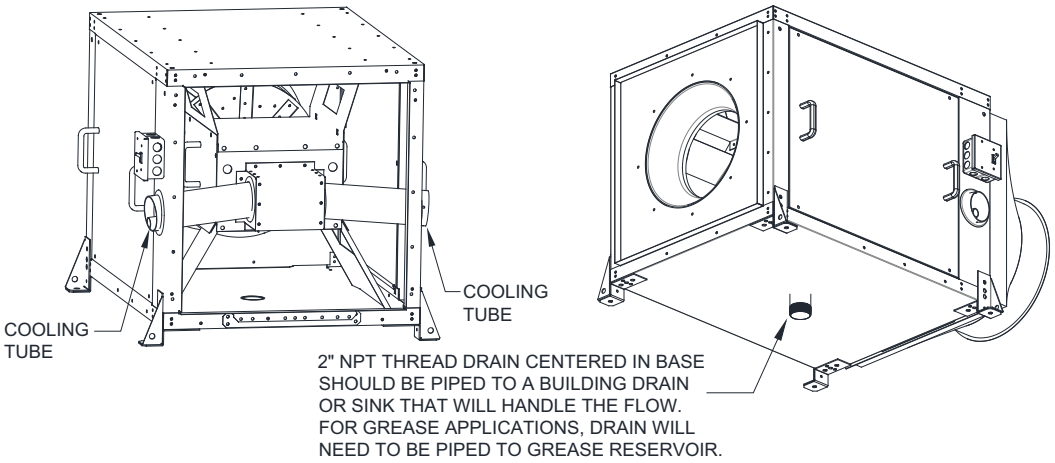

*FAN MUST BE INSTALLED WITH DRAIN POINTING DOWN.

Square Inlet Discharge Options

Figure 27 - Square Inlet Discharge

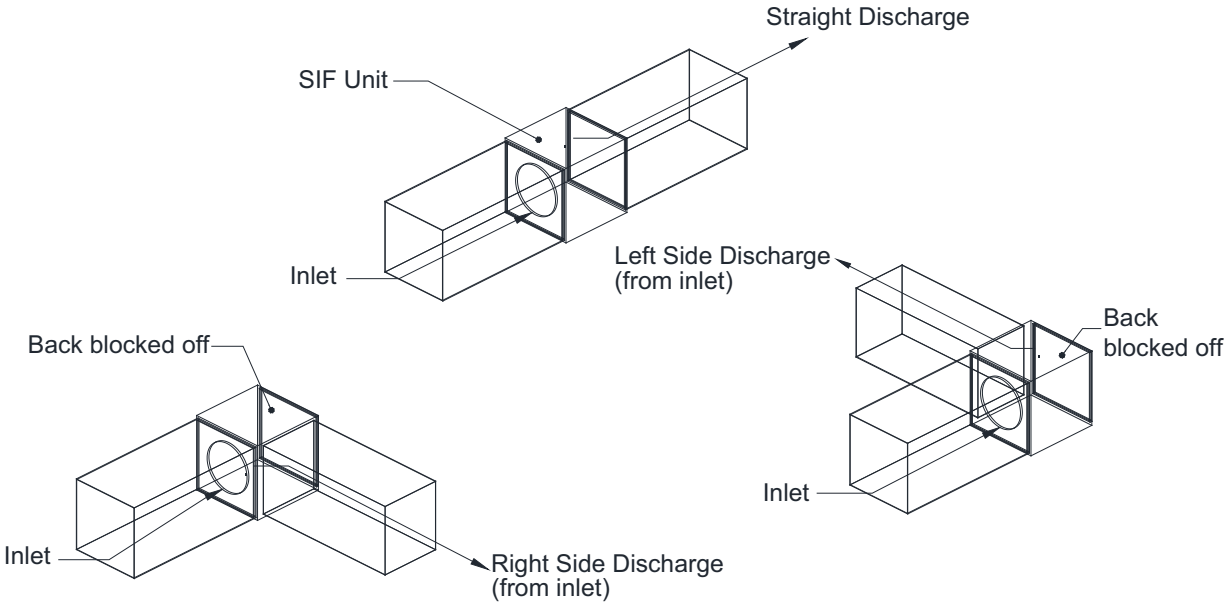

Square Inline Discharge Configurations

Figure 28 - Square Inline Discharge Details

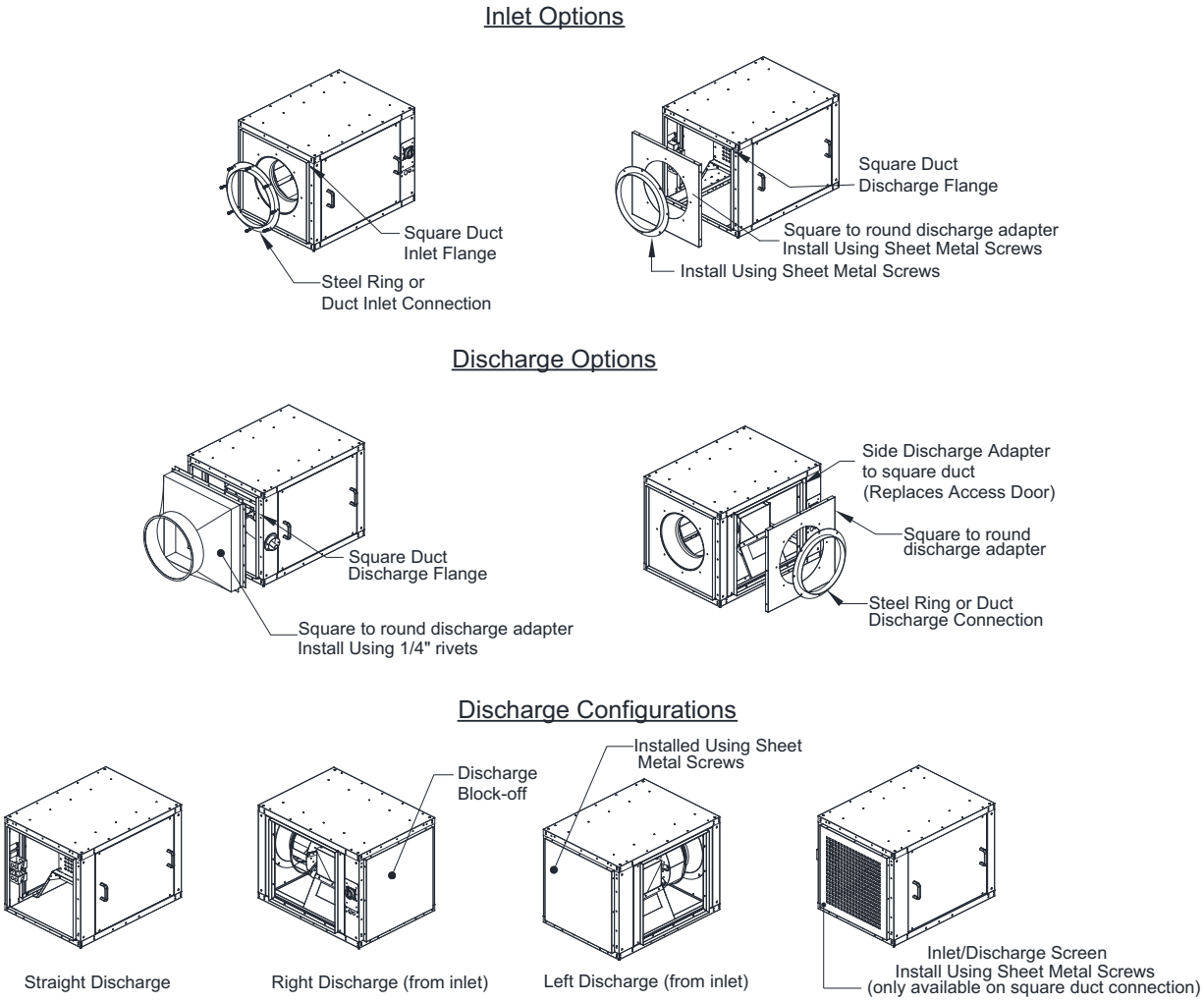

NOTE: If the fan manufacturer's duct is not used, black iron grease duct will need to be welded directly to the unit.

Inlet/Outlet Connections			
Fan Size	**Square Duct Dimension**	**Duct Diameter**	**Steel Ring O.D.**
9-10	12" x 12"	10"	N/A
11	16" x 16"	12"	12.5"
13	18" x 18"	14"	13.5"
15	23" x 23"	16"	15.25"
18	24" x 24"	20"	18.5"
20	28" x 28"	20"	19.625"
24	35" x 35"	24"	25.375"
30	42" x 42"	24"	24.375"
36	48" x 48"	30"	30.5"

ELECTRICAL

WARNING!!

Disconnect power before installing or servicing unit. High voltage electrical input is needed for this equipment. A qualified electrician should perform this work.

Before connecting power to the fan, read and understand the entire section of this document. As-built wiring diagrams are furnished with each unit by the factory and are attached to the fan or provided with paperwork packet.

Electrical wiring (**Table 3**) and connections must be made in accordance with local ordinances and the National Electric Code, ANSI/NFPA 70. Verify the voltage and phase of the power supply, and the wire amperage capacity is in accordance with the unit nameplate. For additional safety information, refer to AMCA publication 410-96, *Recommended Safety Practices for Users and Installers of Industrial and Commercial Fans.*

1. **Always disconnect power before working on or near this equipment. Lock and tag the disconnect switch and/or breaker to prevent accidental power-up**.
2. A dedicated branch circuit should supply the motor circuit with short circuit protection according to the National Electric Code. This dedicated branch should be run to the junction box.
3. A disconnect switch is shipped with every fan. The switch maybe located on the exterior of the fan or in the interior of the fan.On down-blast direct drive fans, the disconnect function is built into the speed controller.
4. Verify that the power source is compatible with the requirements of your equipment. The nameplate identifies the **proper phase and voltage** of the equipment.
5. Before connecting the unit to the building's power source, verify that the power source wiring is de-energized.
6. Secure the power cable to prevent contact with sharp objects.
7. Do not kink power cable and never allow the cable to encounter oil, grease, hot surfaces, or chemicals.
8. Before powering up the unit, make sure that the fan rotates freely. Make sure that the interior of the unit is free of loose debris or shipping materials.
9. If any of the original wire supplied with the unit must be replaced, it must be replaced with type THHN wire or equivalent.

IMPORTANT: FANS WITH HINGE KITS REQUIRE ENOUGH SLACK IN THE WIRING TO THE FAN TO ALLOW FAN TO TILT BACK TO THE OPEN POSITION. ELECTRICIAN MUST CHECK THIS AND ACCOUNT FOR THE RANGE OF MOTION OF THE FAN.

Table 3 - Copper Wire Ampacity

Wire Size AWG	Maximum Amps
14	15
12	20
10	30
8	50
6	65
4	85
3	100
2	115
1	130

Permanent Split Capacitor (PSC) Motor Speed Control

Figure 29 - PSC Motor Speed Control

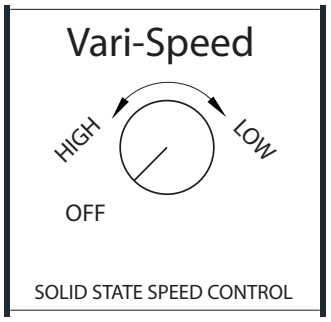

Some single-phase direct-drive fans contain speed controls that regulate the amount of voltage going to the motor. Specific PSC motors must be used in conjunction with speed controls. The speed control has a knob (**Figure 29**) with an off position along with high to low range. At high speed, the speed control allows all of the line voltage to pass directly to the motor.

A minimum speed adjustment is provided to allow independent control of the minimum speed setting. Minimum speed adjustment ensures the motor runs with sufficient torque to prevent stalling. To adjust this:

1. Motor must be in actual operating conditions to achieve proper speed adjustment. Motor will not slow down unless proper load is applied.
2. Turn main control knob to lowest speed position.
3. Locate and adjust minimum speed setting. This can be found under the speed control faceplate. Use a small screwdriver to adjust. Rotate clockwise to decrease minimum speed; counter-clockwise to increase minimum speed.
4. Motor will now operate from this preset minimum speed to full speed.

The lowest minimum voltage that may be applied to these motors is 65V AC. Running lower voltages to the motor can cause premature failure and overheating problems.

Motorized Intake Damper

On units shipped with the optional motorized intake damper, a power transformer is supplied with the unit if the main incoming voltage is greater than 120V. The damper motor is automatically energized when the main disconnect switch is in the ON position. **No external wiring to the damper motor is required.**

Electronically Commutated Motor (ECM) Speed Control

An Electrically Commutated Motor (ECM) with speed control allows for an accurate manual adjustment of the fan's speed. The benefits of using an EC motor is exceptional efficiency, performance, and motor life.

External PWM Signal

The fan unit will be shipped with power wiring and communication wiring fed to an internal junction box. The fan is shipped with Shielded Twisted Pair (STP) wire which is used to wire to a remote PWM signal. Red wire is used to go to the positive PWM signal, black wire is used to go to the negative PWM signal. Reference schematics for all wiring connections. STP is connected to the communication wiring of the motor using wire nuts in the junction box. If a preset length of STP is provided, it will be connected to the junction box from the factory. Run the STP through any available knockout in the fan base.

Unit Mount Controller

The RTC speed controller features a 4 digit LED display with a five button interface. All parameters can be accessed through the user menu. The percent of run speed can be changed by using the **Up** and **Down** buttons followed by pressing **Enter** (middle button) to save changes. Every **ten seconds** the display will toggle between current percentage of run speed and current RPMs. The flow index has a range of **0-100%** and is typically linear with motor RPM.

If the remote function (re) is enabled, the speed is controlled through a **0-10V** input. **0V = 0%** and **10V = 100%**, unless overridden by the low speed and high speed limits.

The speed controller requires a **24V AC** input and can locally turn the motor on and off. The motor RPM range is fully adjustable between the minimum and maximum setpoints, see LSPD and HSPD on the programming display. For more information, see the RTC control operating manual.

For all motors except 16Z, 18Z, 20Z, 22Z, 25Z, 28Z: If "oFF" is being displayed, and the speed is set above 300 RPM, the ECM is not receiving RPM feedback. Check that the ECM is wired correctly. Check that the motor "tyP" in the settings matches the motor manufacturer. 16Z, 18Z, 20Z, 22Z, 25Z, 28Z do not send RPM feedback.

NOTE: A Variable Frequency Drive (VFD) is required to adjust the speed control of a non-electrically commutated 3-phase direct-drive motor.

Figure 30 - RTC Speed Controller and Menu

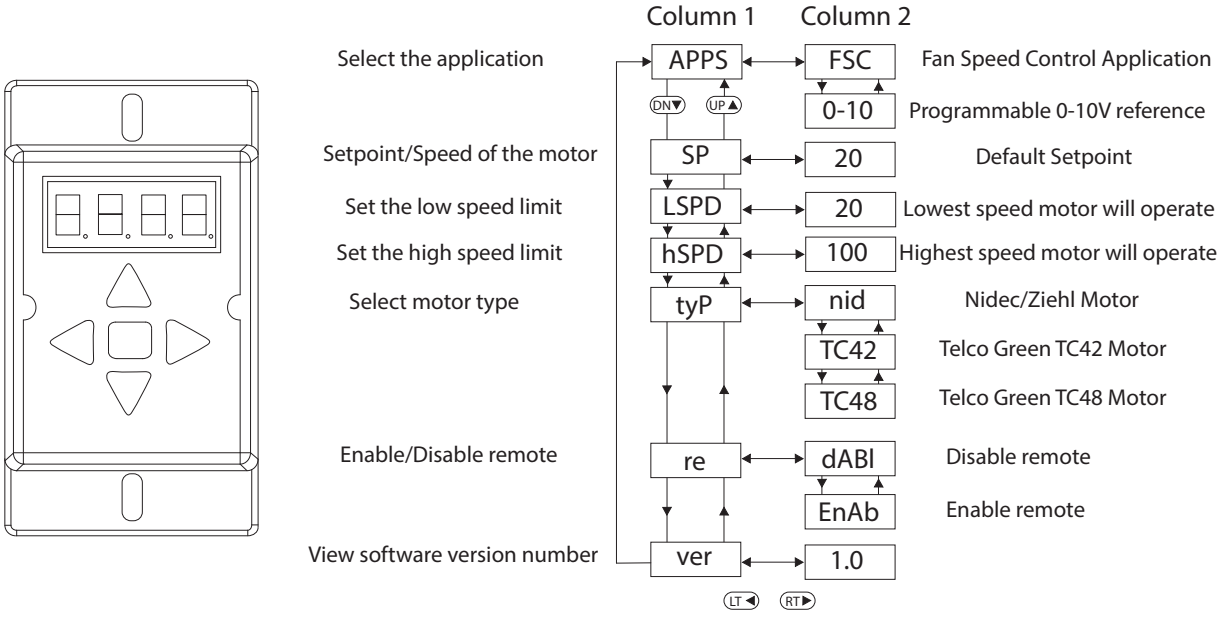

External PWM Signal

Figure 31 illustrates ECM fan wiring. The fan unit will be shipped with power wiring and communication wiring fed to an internal junction box
(J-Box). The fan is shipped with Shielded Twisted Pair (STP) wire, which is used for wiring to a remote PWM signal. Power the unit off. Remove top cover from fan. Remove J-Box cover to access wiring connections.

- The STP wire is connected to the communication wiring of the motor using wire nuts in the junction box. If a preset length of STP is provided, it will be connected to wiring located in junction box from the factory.
- If wiring is not connected from the factory, connect the red wire to the positive PWM signal and the black wire to the negative PWM signal. Reference schematics for all wiring connections (PxA and PxB).
- Run STP wiring through the cooling tube and along the power wiring of the fan, secure the two together with zip ties. Ensure there is enough slack for the fan to hinge open and close freely.
- Refer to wiring schematics to verify wiring and connections.

Figure 31 - ECM Fan Wiring

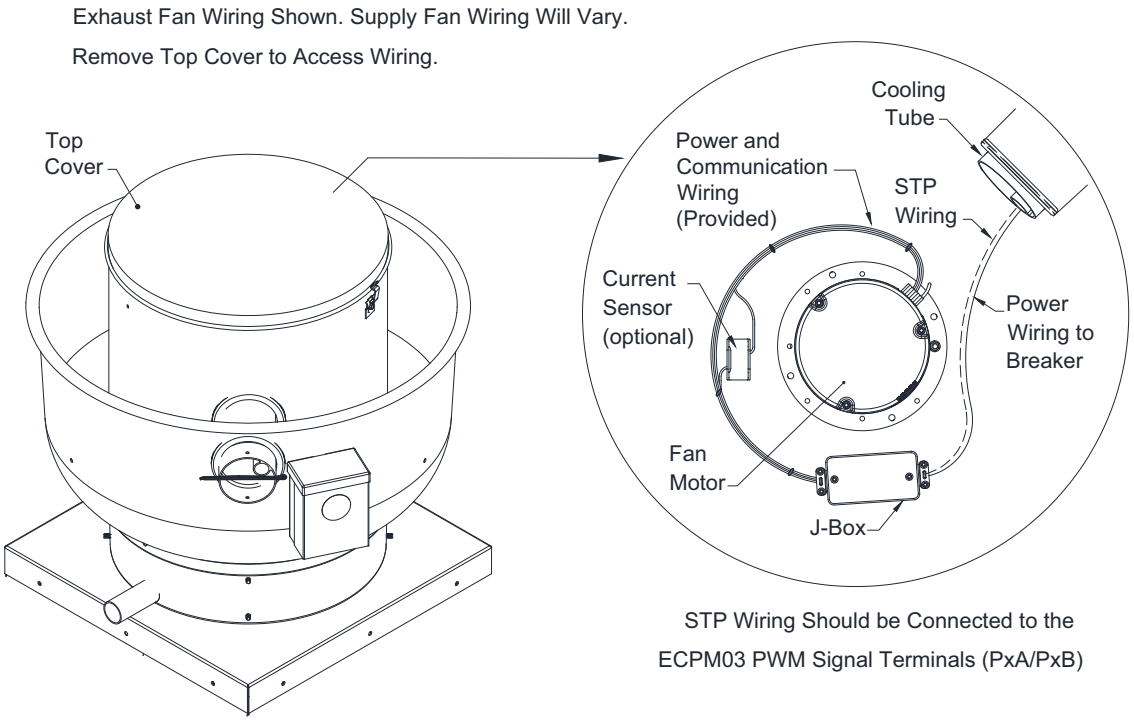

Motor Speed Controller (MSC) Installation

The Motor Speed Controller (MSC) is a versatile device able to output various signal types to many different Electrically Commutated Motors (ECMs). The MSC signal output types can be selected under the 'Motor Type' section of the MSC menu. The MSC may be installed in a fan, remotely in a kitchen space, or in a mechanical room. While this device can be mounted remotely and powered using 24V, it may also be mounted with the fan where it will be exposed to higher voltages. If installed in the fan, the electrical installation must be carried out according to the appropriate regulations (e.g., cable cross-sections, circuit breaker, protective earth [PE] connection). National and local codes must be followed during the installation process.

The MSC board may be powered through a 120VAC/24VAC CLASS 2 transformer, 120V AC/24V DC CLASS 2 power supply, or through MODBUS connections.

The MSC contains static sensitive components. Therefore, you must handle with care to avoid damage to these components. All operations concerning installation, commissioning, and maintenance must be carried out by qualified, skilled personnel who are familiar with the installation, assembly, commissioning, and operation of the electronic board and the application for which it is being used.

Ensure proper handling and avoid excessive mechanical stress. Do not bend any components when handling or installing component. **Do not touch any electronic components or contacts**.

Precautions must be adhered to during installation, testing, servicing, and repairing of this board. Component damage may result if proper procedures are not followed.

Do not install the MSC where it is subjected to adverse environmental conditions such as combustibles, oils, hazardous vapors, corrosive chemicals, excessive dust, moisture, direct sunlight, or extreme temperatures. When removing or installing the MSC to the j-box, verify the gasket is present. All electrical connections for the MSC are located on the backside of the controller. Refer to **Figure 32** for details on installation and electrical connections. When the micro USB programming port is not in use, place the weather-seal plug into the port location.

Figure 32 - Installation/Electrical Connections

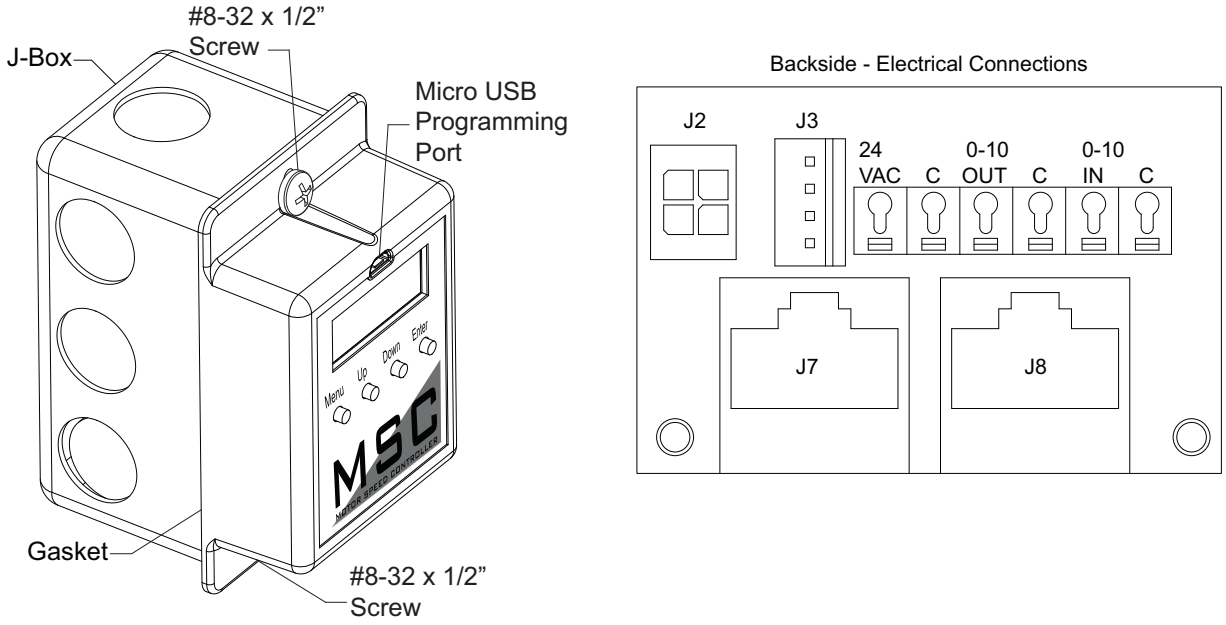

MSC Controls Overview

There are four buttons to navigate through the menu screens, refer to **Figure 33**.

Press the **MENU** button to access menu settings/parameters, pressing **MENU** will also back out of the current menu screen. To scroll through menus, use **UP** and **DOWN** buttons. Press the **ENTER** button to change setting/parameter selection.

To enter password, press MENU, then press **ENTER** when “Board Config” is displayed. Use **UP** and **DOWN** to scroll through numbers, press **ENTER** to advance to the next numerical setting. To save changes, press **MENU** until the screen displays “SAVE CHANGES? [ENTER] TO SAVE.” Press the ENTER button to save changes.

Figure 33 - MSC Front Detail View

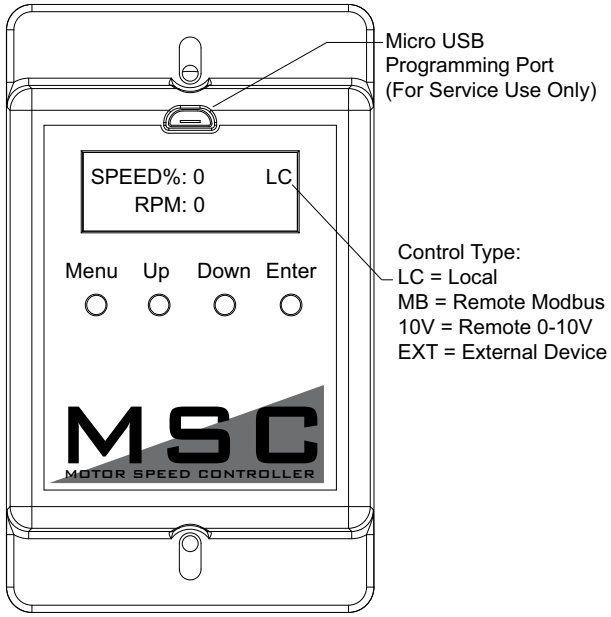

MSC Menu

Board Config - Password (default is 0225)

- **Motor Type** - User may change motor type between Nidec, Telco 42, Telco 48, Ziehl, 0-10V, Other.
- **Control Type** - This setting adjusts how the fan will be controlled.
  - **Local** - The fan will be controlled by the MSC.
  - **Remote Modbus** - The fan will be controlled by another master board through the MSC. A connection between the 0-10V Out to 0-10V In must be made for start command.
  - **Remote 0-10V** - The fan will be controlled by an external 0-10V signal.
- **Speed Settings** - Provides access to speed and voltage settings.
  - **Low Speed** - Adjustable speed from 20% up to high speed setting, or 0-10V. Setting cannot go above High Speed parameter.
  - **High Speed** - Adjustable speed from 100% down to low speed setting, or 10-0V. Setting cannot go below Low Speed parameter.
  - **Set Speed%** - Adjustable speed range is dependent on Low Speed and High Speed settings. This controls the output of the motor.
  - **Voltage Range** - Only available when Motor Type “OTHER” is selected. Default setting is 24V. 5V, and 10V are also available.

- **Modbus #** - Adjustable Modbus ID. Exhaust Fan range 11-18, Supply Fan range 21 or 22. **A VFD and MSC cannot use the same Modbus #**.
- **Options**
  - **Feedback Fault** - If set to ENABLED, the MSC will monitor RPM feedback. If the MSC does not receive data for 30 seconds or 70% of the expected RPM, this fault will be displayed. **Ziehl motors do not provide feedback.**
  - **2 Speed** - The 0-10V output cannot be used when the 2 Speed or Manual Speed options are On, or if the "Control Type" is set to Modbus. When the 0-10V OUT and 0-10V IN terminals are **not** jumped together, the fan will operate at low speed. When 0-10V OUT and 0-10V IN terminals are jumped together, the fan will operate at high speed.
  - **Analog Speed** - The user may enable/disable the option, and calibrate a potentiometer for proper operation that is connected between the 0-10V OUT and 0-10V IN terminals. When enabled, you must calibrate the potentiometer. Follow the MSC's on-screen instructions. The speed will be adjustable between 0V (low speed) to 10V (high speed).
  - **Input Threshold** - When control type is set to Remote 0-10V, an input threshold will be created for motor control. Refer to **Figure 34 on page 36** for threshold examples.
    - **Zero Operation** - The user may select how the motor will operate when the 0-10V input is at 0V. The options will be Off or Low Speed (default).
    - **Threshold** - Increasing the threshold value will allow for the device to hold its voltage/RPM output while the input is between the 0 - threshold value.
- **Restore Settings** - Provides access to restore factory settings, and test & balance settings.
  - **Factory Settings** - This will reset all values back to factory settings.
  - **T & B Settings** - This will reset all values back to last saved test & balance settings.
- **Change Password** - Users may update the password setting to their own. Password 0225 will also be stored for backup. Both passwords will allow users to enter "Board Config" settings.

Software Version - Displays the current software version installed on the board.

Faults - This provides access to "Fault History," "Fault Totals," and "Clear Faults."

- **Fault History** - Displays fault history and board reboots in chronological order. Possible displayed faults are:
  - **No Faults** - There are no active faults with the system.
  - **Feedback Fault** - Only displayed for motors with feedback capabilities.
  - **Reboot** - Any time the fan goes from OFF to ON, this "fault" will be logged. This fault will only display in "Fault History."
  - **Modbus** - Issue with Modbus communication between the MSC and master board.
  - **Variable Device Fault** - When "Analog Speed" is selected and a potentiometer is connected, if the voltage drops below 1V, this fault will be displayed.
- **Fault Totals** - Displays amount of faults for Modbus, Feedback, Var Device, Reboot, and Total Faults.
- **Clear Faults** - Users may clear all faults from the board.

Service - This provides access to service settings. Password: 1234

- **Save T & B** - After the test & balance process has been completed, save adjustments under this menu.
- **IO Status** - Provides access to information about the inputs and outputs of the MSC board.
  - **V In** - Displays the incoming voltage (0-10V) to the MSC.
  - **V Out** - Displays the output voltage (0-10V) to the motor.
  - **RPM** - Displays motor RPM feedback. **Ziehl motors do not provide feedback.**
  - **PWM V** - Displays equivalent voltage reading of the PWM output to the motor.
  - **Speed%** - Displays PWM percentage output value to the motor.

Input Threshold

Figure 34 - Input Threshold Examples

Factory Default: Zero operation set to low speed, threshold set to 0V.

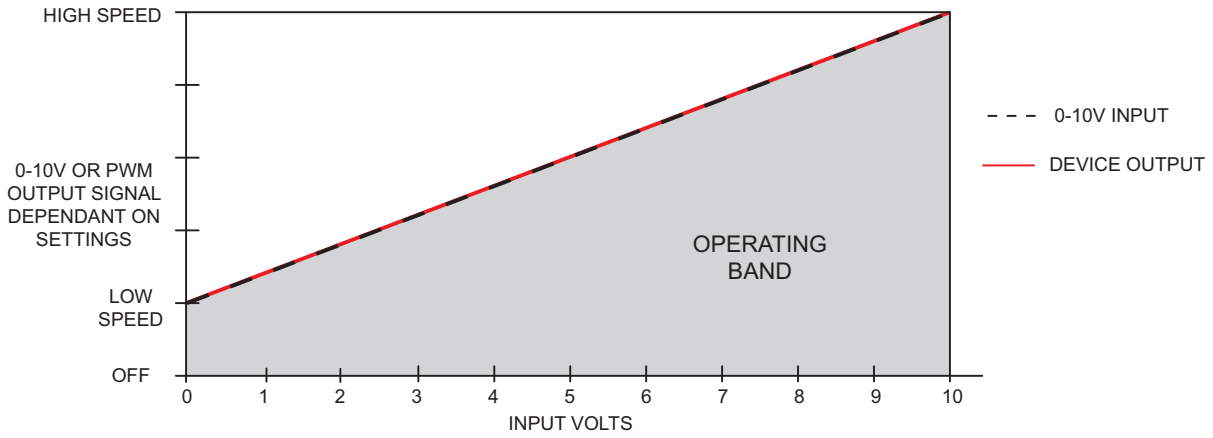

Zero operation set to low speed, threshold set to 2V.

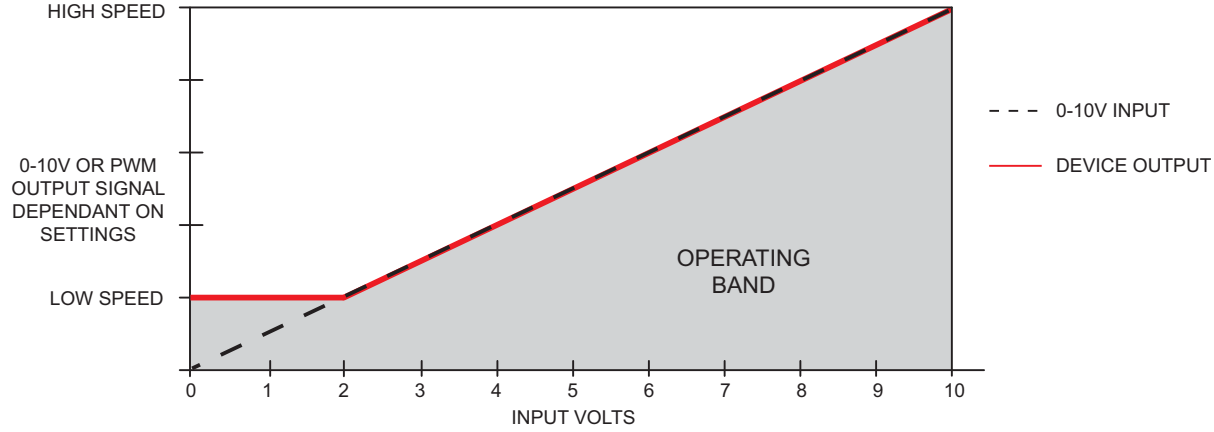

Zero operation set to off, threshold set to 2V.

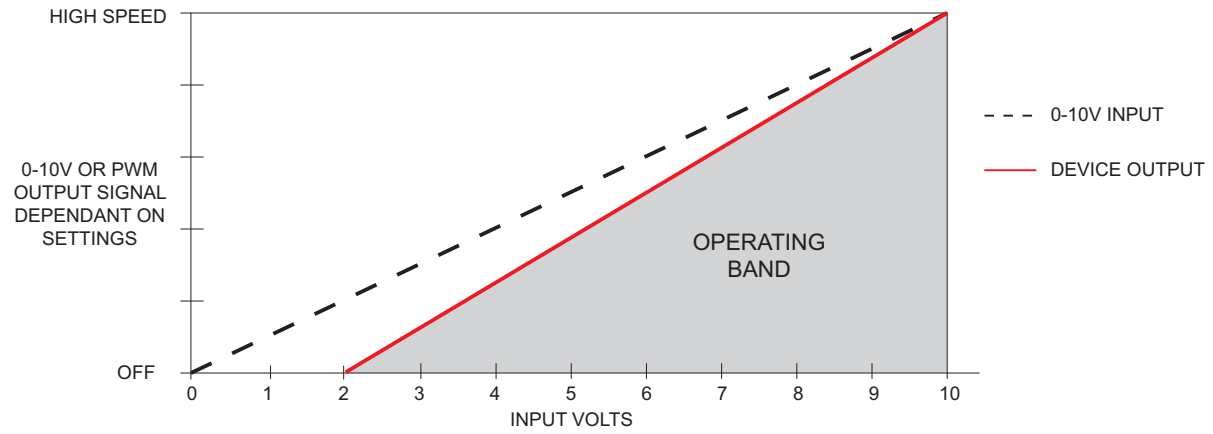

MSC Menu Tree

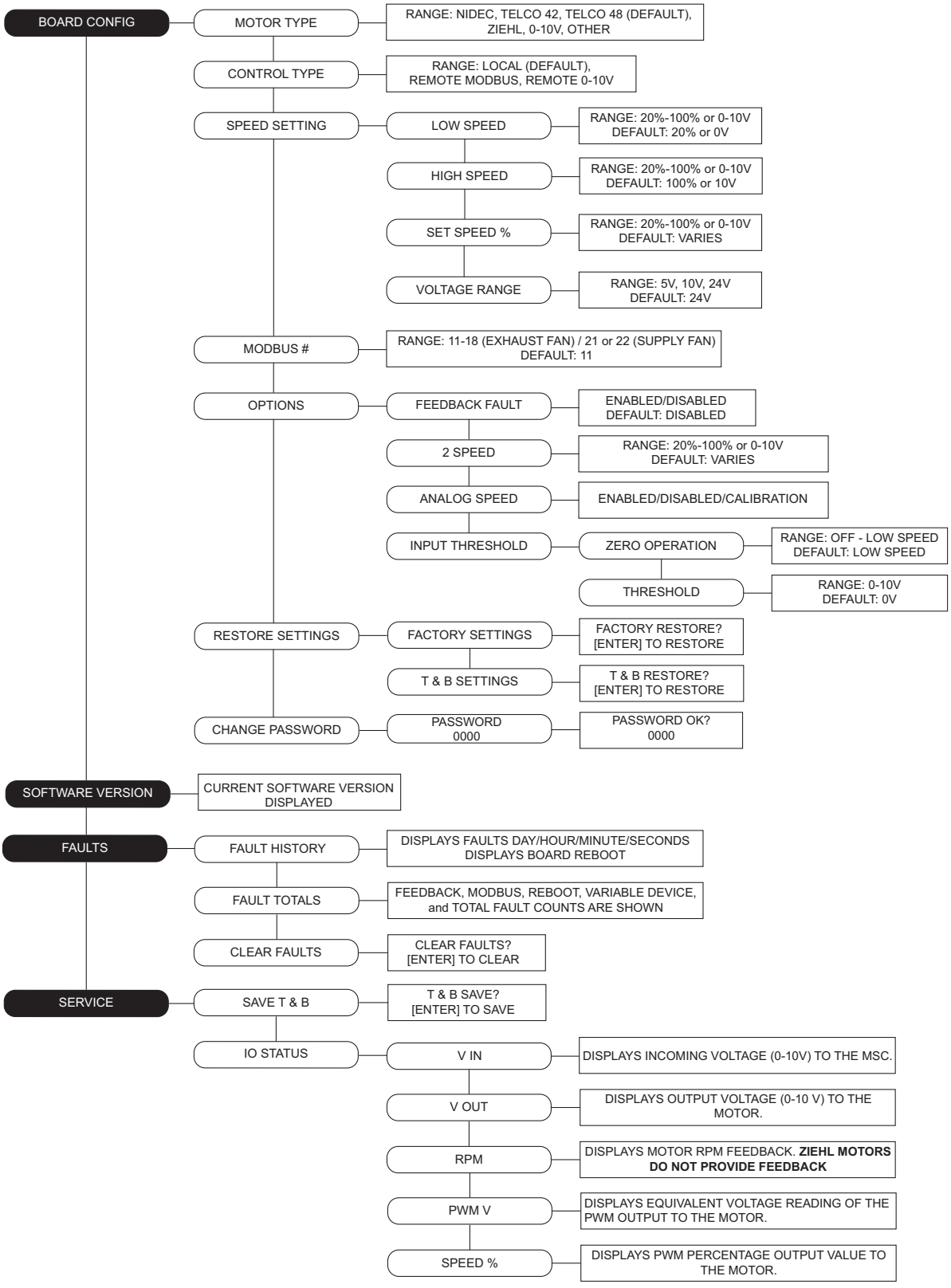

Fan to Building Wiring Connection

Figure 35 - Wiring Connection Details

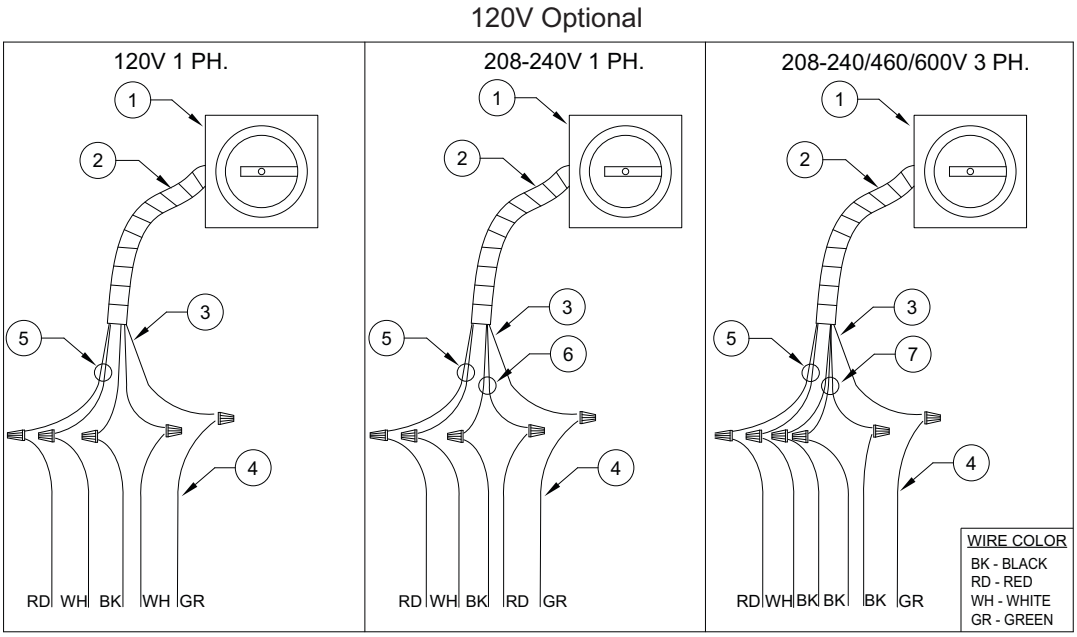

1. Disconnect Switch
2. Galflex Conduit (In Unit)
3. Factory Wiring
4. Field Supplied Wiring - From building power or pre-wired control panel.
5. 120V Single Phase Standing Power
6. 208-240 Single Phase
7. Three Phase

Variable Frequency Drive (VFD)

WARNING!!
- Before installing the VFD drive, ensure the input power supply to the drive is OFF.
- The power supply and motor wiring of the VFD must be completed by a qualified electrician.
- The VFD is factory programmed, only change if replaced or ordered separately.

Consult the VFD manual and all documentation shipped with the unit for proper installation and wiring of the VFD. The VFD has been programmed by the factory with ordered specific parameters. Use **Table 5** as a guide during installation.

Table 5 - VFD Installation Check List

Check Off	Description
	The installation environment conforms to the VFD manual.
	The drive is mounted securely.
	Space around the drive meets the drive's specification for cooling.
	The motor and driven equipment are ready to start.
	The drive is properly grounded.
	The input power voltage matches the drive's nominal input voltage.
	The input power connections at L1, L2, and L3 are connected and tight.
	The input power protection is installed.
	The motor power connection at U, V, and W are connected and tight.
	The input, motor, and control wiring are run in separate conduit runs.
	The control wiring is connected and tight.
	NO tools or foreign objects (such as drill shavings) are in the drive.
	NO alternative power source for the motor (such as a bypass connection) is connected - NO voltage is applied to the output of the drive.

Variable Frequency Drive (VFD) Installation

Input AC Power

- Circuit breakers feeding the VFDs are recommended to be thermal-magnetic and fast-acting. They should be sized based on the VFD amperage and according to . Refer to the installation schematic for exact breaker sizing.
- Every VFD should receive power from its own breaker. If multiple VFDs are to be combined on the same breaker, each drive should have its own protection measure (fuses or miniature circuit breaker) downstream from the breaker.
- Input AC line wires should be routed in conduit from the breaker panel to the drives. AC input power to multiple VFDs can be run in a single conduit if needed. **Do not combine input and output power cables in the same conduit.**
- The VFD should be grounded on the terminal marked PE. A separate insulated ground wire must be provided to each VFD from the electrical panel. This will reduce the noise being radiated in other equipment.

ATTENTION: Do not connect incoming AC power to output terminals U, V, W. Severe damage to the drive will result. Input power must always be wired to the input L terminal connections (L1, L2, L3).

VFD Output Power

- Motor wires from each VFD to its respective motor MUST be routed in a **separate steel** conduit away from control wiring and incoming AC power wiring. This is to avoid noise and crosstalk between drives. An insulated ground must be run from each VFD to its respective motor. Do not run different fan output power cables in the same conduit.
- VFD mounted in ECP: A load reactor should be used and sized accordingly when the distance between the VFD and motor is greater than specified below. The load reactor should be installed within 10 feet of the VFD output:

  208/230V - Load reactor should be used when distance exceeds 250 feet.
  460/480V - Load reactor should be used when distance exceeds 50 feet.
  575/600V - Load reactor should be used when distance exceeds 25 feet.
- VFD mounted in fan: The load reactor should be sized accordingly when the VFD is mounted in the fan.

  208/230V - Load reactor is optional but recommended for 15 HP and above motors.
  460/480V - Load reactor is optional but recommended for 7.5 HP and above motors.
  575/600V - Load reactors are required for all HP motors.
- If the distance between the VFD and the motor is extremely long, up to 1000 FT, a dV/dT filter should be used, and the VFD should be increased by 1 HP or to the next size VFD. The dV/dT filter should be sized accordingly and installed within 10 feet of the output of the VFD.

  208/230V – dV/dT filter should be used when distance exceeds 400 feet.
  460/480V – dV/dT filter should be used when distance exceeds 250 feet.
  575/600V – dV/dT filter should be used when distance exceeds 150 feet.
- Do not install a contactor between the drive and the motor. Operating such a device while the drive is running can potentially cause damage to the power components of the drive.
- When a disconnect switch is installed between the drive and motor, the disconnect should only be operated when the drive is in a STOP state.

VFD Programming

Programming

1. The Drive should be programmed for the proper motor voltage. P107 is set to 0 (Low) if motor voltage is 120V AC, 208V AC or 400V AC. P107 is set to 1 (High) if the motor voltage is 230V AC, 480V AC, or 575V AC.
2. The Drive should be programmed for the proper motor overload value. P108 is calculated as Motor FLA x 100 / Drive Output Rating (available in).

To enter the PROGRAM mode to access the parameters:

1. Use the buttons on the VFD screen (**Figure 36**) to adjust VFD settings. Press the Mode (M) button. This will activate the password prompt (PASS).
2. Use the Up and Down buttons to scroll to the password value (the factory default password is “0225”) and press the Mode (M) button. Once the correct password is entered, the display will read “P100”, which indicates that the PROGRAM mode has been accessed at the beginning of the parameter menu.
3. Use the Up and Down buttons to scroll to the desired parameter number.
4. Once the desired parameter is found, press the Mode (M) button to display the present parameter setting. The parameter value will begin blinking, indicating that the present parameter setting is being displayed. The value of the parameter can be changed by using the Up and Down buttons.
5. Pressing the Mode (M) button will store the new setting and exit the PROGRAM mode. To change another parameter, press the Mode (M) button again to re-enter the PROGRAM mode. If the Mode button is pressed within 1 minute of exiting the PROGRAM mode, the password is not required to access the parameters. After one minute, the password must be re-entered to access the parameters again.

P500 parameter provides a history of the last 8 faults on the drive. It can be accessed without entering PROGRAM mode.

Figure 36 - VFD Screen

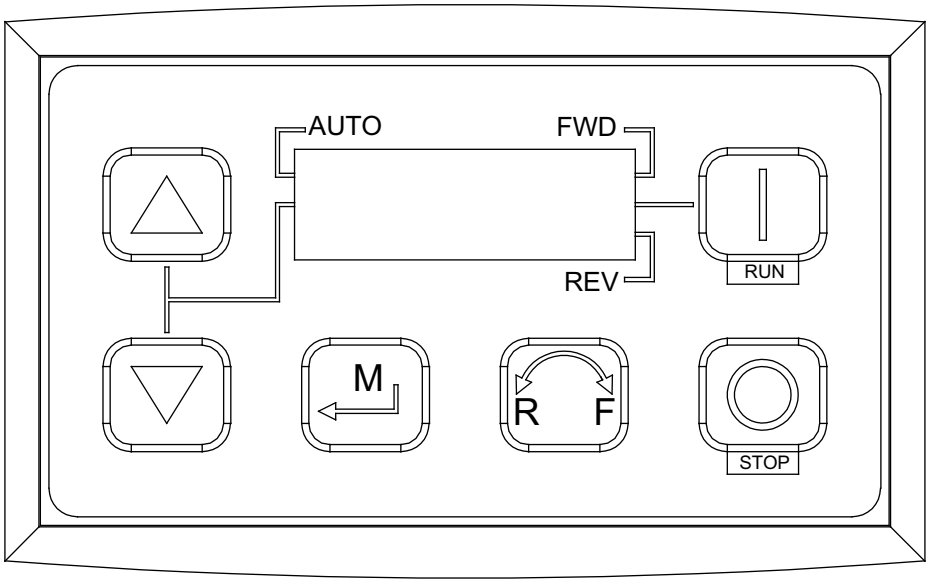

ACTECH SMV VFD

Table 6 - Cross Reference Table

HP	Part Number	Volts	1Ø Input	3Ø Input	Input Amps 1Ø 120V AC	Input Amps 1Ø 240V AC	Output Amps	Breaker 1Ø 120V AC	Breaker 1Ø 240V AC
0.33	ESV251N01SXB	120/240V	X	-	6.8	3.4	1.7	15	15
0.5	ESV371N01SXB	120/240V	X	-	9.2	4.6	2.4	15	15
1	ESV751N01SXB	120/240V	X	-	16.6	8.3	4.2	25	15
1.5	ESV112N01SXB	120/240V	X	-	20	10	6	30	20

HP	Part Number	Volts	1Ø Input	3Ø Input	Input Amps 1Ø	Input Amps 3Ø	Output Amps	Breaker 1Ø	Breaker 3Ø
0.5	ESV371N02YXB	240V	X	X	5.1	2.9	2.4	15	15
1	ESV751N02YXB	240V	X	X	8.8	5	4.2	15	15
1.5	ESV112N02YXB	240V	X	X	12	6.9	6	20	15
2	ESV152N02YXB	240V	X	X	13.3	8.1	7	25	15
3	ESV222N02YXB	240V	X	X	17.1	10.8	9.6	30	20
5	ESV402N02TXB	240V	-	X	-	18.6	16.5	-	30
7.5	ESV552N02TXB	240V	-	X	-	26	23	-	40
10	ESV752N02TXB	240V	-	X	-	33	29	-	50
15	ESV113N02TXB	240V	-	X	-	48	42	-	80
20	ESV153N02TXB	240V	-	X	-	59	54	-	90
1	ESV751N04TXB	480V	-	X	-	2.5	2.1	-	15
1.5	ESV112N04TXB	480V	-	X	-	3.6	3	-	15
2	ESV152N04TXB	480V	-	X	-	4.1	3.5	-	15
3	ESV222N04TXB	480V	-	X	-	5.4	4.8	-	15
5	ESV402N04TXB	480V	-	X	-	9.3	8.2	-	15
7.5	ESV552N04TXB	480V	-	X	-	12.4	11	-	20
10	ESV752N04TXB	480V	-	X	-	15.8	14	-	25
15	ESV113N04TXB	480V	-	X	-	24	21	-	40
20	ESV153N04TXB	480V	-	X	-	31	27	-	50
25	ESV183N04TXB	480V	-	X	-	38	34	-	70
30	ESV223N04TXB	480V	-	X	-	45	40	-	80
1	ESV751N06TXB	600V	-	X	-	2	1.7	-	15
2	ESV152N06TXB	600V	-	X	-	3.2	2.7	-	15
3	ESV222N06TXB	600V	-	X	-	4.4	3.9	-	15
5	ESV402N06TXB	600V	-	X	-	6.8	6.1	-	15
7.5	ESV552N06TXB	600V	-	X	-	10.2	9	-	20
10	ESV752N06TXB	600V	-	X	-	12.4	11	-	20
15	ESV113N06TXB	600V	-	X	-	19.7	17	-	30
20	ESV153N06TXB	600V	-	X	-	25	22	-	40
25	ESV183N06TXB	600V	-	X	-	31	27	-	50
30	ESV223N06TXB	600V	-	X	-	36	32	-	60

START-UP OPERATION

Before starting up or operating the unit, verify all fasteners are secure and tight. Check the set screw in the wheel hub, bearings, and the fan sheaves (pulleys). With power **OFF** to the unit or before connecting the unit to power, turn the fan wheel by hand. Verify it is not striking the inlet or any obstructions. If necessary, re-center.

Special Tools Required: Standard Hand Tools, AC Voltage Meter, Tachometer

Start-up Procedure

1. Check all electrical connections are secure and tight.
2. Inspect the condition of the intake damper and damper linkage, if applicable.
3. Inspect the air-stream for obstructions or debris in wheel.
4. Compare the supplied **motor voltage** with the fan's nameplate voltage. If this does not match, correct the problem.
5. Place the external disconnect to the **ON** position to start the unit. Immediately place the disconnect switch off. **Check the rotation of the fan** with the directional arrow on the blower scroll. Reversed rotation will result in poor air performance, motor overloading and possible burnout. For units equipped with a single-phase motor, check the motor wiring diagram to change rotation. For 3-phase motors, any two power leads can be interchanged to reverse motor direction.
6. When the fan is started, observe the operation and check for any unusual noises.
7. Place the external disconnect switch back to the **ON** position. The system should be in full operation with all ducts attached. Measure the system airflow. The motor sheave (pulley) is variable pitch and allows for an increase or decrease of the fan RPM. If an adjustment is needed, refer to **"Pulley Adjustment" on page 44**. Refer to **Table 6** and **"Pulley Combination Chart" on page 47** for adjustment specifications.
8. Once the proper airflow is achieved, measure and record the fan speed with a reliable tachometer. **Caution - Excessive speed will result in motor overloading or bearing failure. Do not set fan RPMs higher than specified in the maximum RPM chart.** Refer to **"Troubleshooting" on page 48** for more information.
9. Measure and record the **voltage** and **amperage** to the motor. Compare with the motor's nameplate to determine if the motor is operating under safe load conditions. Once the RPM of the ventilator has been properly set, disconnect power. Re-check belt tension and pulley alignment, refer to **"Pulley Alignment/Proper Belt Tension" on page 45**.

Pulley Adjustment

The adjustable motor pulley is factory set for the RPM specified. Speed can be increased by closing or decreased by opening the adjustable motor sheave. Two groove variable pitch pulleys must be adjusted to an equal number of turns open or closed. Any increase in speed represents a substantial increase in horsepower required by the unit. Motor amperage should always be checked to avoid serious damage to the motor when the speed is varied. Always torque set screws according to the torque specifications shown in **Figure 37**.

Figure 37 - Adjustable Pulley

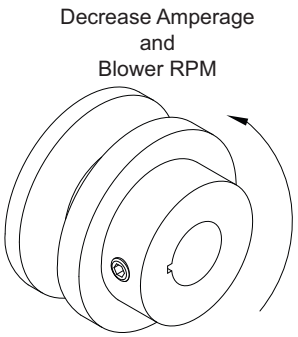

Setscrew Thread Size	Torque (in-lbs)
No. 10 (bushing)	32
1/4” (bushing)	72
5/16”	130

Table 7 - Maximum RPM and HP Chart

Belt Drive		
Blower Size	**Max. RPM**	**Max. HP**
10”	1800	2
12”	1500	3
15”	1400	5
18”	1200	5
20”	1000	10
25”	900	20

Direct Drive		
Blower Size	**Max. RPM**	**Max. HP**
15D	1800	2
20D	1500	3
24D	1400	5
30D	1200	5
36D	1000	10
16Z	2400	4
18Z	3200	5
20Z	2300	5
22Z	1900	5
25Z	1800	8
28Z	1400	7

Pulley Alignment/Proper Belt Tension

1. Belts tend to stretch and settle into pulleys after an initial start-up sequence. **Do not tension belts by changing the setting of the motor pulley**, this will change the fan speed and may damage the motor.
   - To re-tension belts, turn OFF power to the fan motor.
   - Loosen the fasteners that hold the blower scroll plate to the blower.
   - Rotate the motor to the left or right to adjust the belt tension. Belt tension should be adjusted to allow 1/64” of deflection per inch of belt span. Use extreme care when adjusting V-belts as not to misalign pulleys. Any misalignment will cause a sharp reduction in belt life and produce squeaky noises. Over-tightening will cause excessive belt and bearing wear as well as noise. Too little tension will cause slippage at startup and uneven wear.
   - **Whenever belts are removed or installed, never force belts over pulleys without loosening motor first to relieve belt tension.** When replacing belts, use the same type as supplied by the manufacturer. On units shipped with double groove pulleys, matched belts should always be used.
2. All fasteners should be checked for tightness each time maintenance checks are performed before restarting unit.

Belt tension examples:

- Belt span 12” = 3/16” deflection
- Belt span 32” = 1/2” deflection

Figure 38 - Pulley Alignment/Belt Tension

A. Belt Span Length
B. Deflection
C. Center Distance

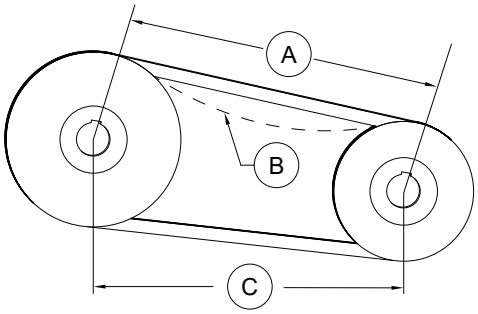

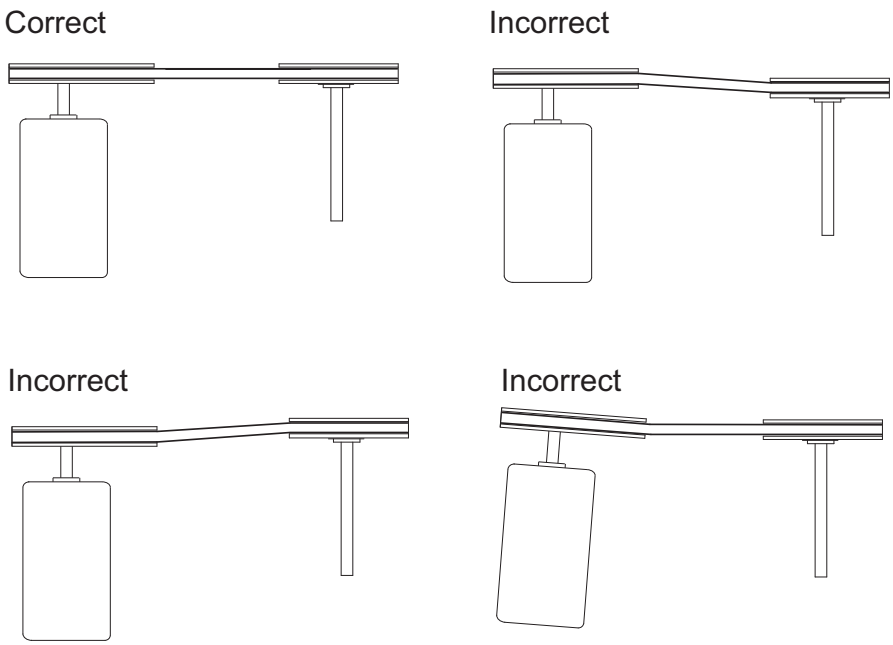

Bushing Information

Refer to **Figure 39** for fan bushing assembly details. **Bushing type is stamped on the face of the bushing.**

1. Place bushing key into bushing slot **(A)**, excludes H bushing.
2. Install bushing into wheel hub. Align bushing key with hub keyway **(B)**.
3. Use blue Loctite on the mounting bolts.
4. Install wheel assembly so that the bushing keyway **(C)** is aligned with the motor's shaft key **(D)**.
5. For Direct Drive motors, make sure the bushing is flush to the tip of the motor shaft.
6. For Belt Drive motors, make sure the wheel is properly aligned to the inlet.
7. Tighten set screw to lock shaft key in place. Install bolts and torque to proper setting listed in **Table 8**.
8. There are threaded holes provided on the bushing. These holes are for removing the bushing when required.

Figure 39 - Bushing Details

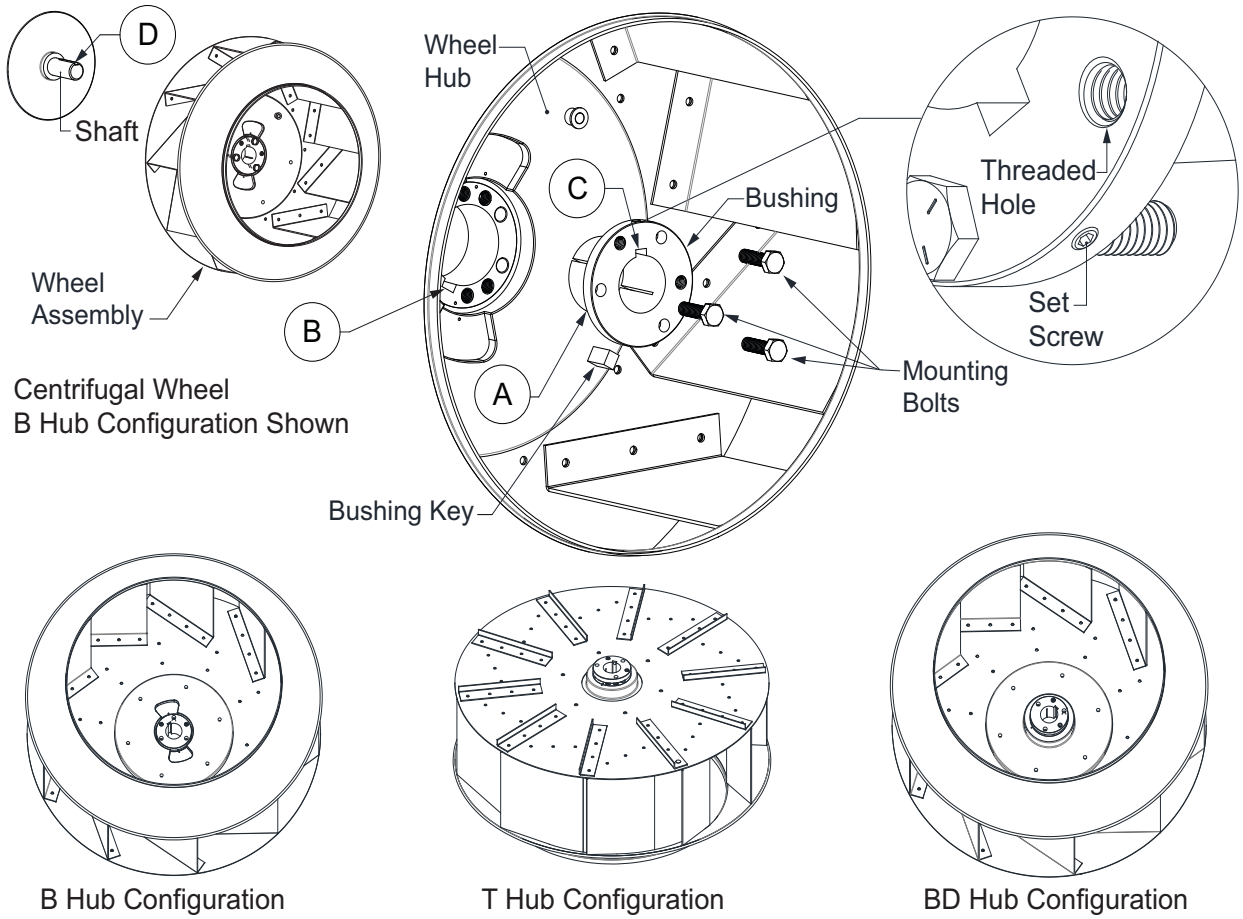

Table 8 - Bushing Specifications

Bushing Type	Outer Diameter	Bolt Size	Torque (In-lbs)	Set-Screw (in-lbs)
H	2-1/2"	1/4" X 3/4"	95	17
P1	3"	5/16" X 1"	192	65
Q1	4-1/8"	3/8" X 1-1/4"	348	115

Pulley Combination Chart

Motor RPM		1725												
1/3 to 1-1/2 HP		MOTOR PULLEY	Dd1	Dd2	Pd1	Pd2								
AX BELTS		1VL34	1.9	2.9	2	3								
			Open						TURNS ON MOTOR PULLEY					Closed
BLOWER PULLEY	DATUM DIAMETER	PITCH DIAMETER	5	4 1/2	4	3 1/2	3	2 1/2	2	1 1/2	1	1/2	0	
AK114	11	11.2	308	323	339	354	370	385	400	416	431	447	462	

1/3 to 1-1/2 HP		MOTOR PULLEY	Dd1	Dd2	Pd1	Pd2								
AX BELTS		1VL40	2.4	3.4	2.6	3.6								
			Open						TURNS ON MOTOR PULLEY					Closed
BLOWER PULLEY	DATUM DIAMETER	PITCH DIAMETER	5	4 1/2	4	3 1/2	3	2 1/2	2	1 1/2	1	1/2	0	
AK114	11	11.2	400	416	431	447	462	477	493	508	524	539	554	
AK94	9	9.2	488	506	525	544	563	581	600	619	638	656	675	
AK79	7.5	7.7	582	605	627	650	672	694	717	739	762	784	806	
AK66	6.2	6.4	701	728	755	782	809	836	863	889	916	943	970	
AK54	5	5.2	863	896	929	962	995	1028	1062	1095	1128	1161	1194	
AK46	4.2	4.4	1019	1059	1098	1137	1176	1215	1255	1294	1333	1372	1411	
AK39	3.5	3.7	1212	1259	1305	1352	1399	1445	1492	1539	1585	1632	1678	
AK32	3	3.2	1402	1455	1509	1563	1617	1671	1725	1779	1833	1887	1941	

2 to 5 HP		MOTOR PULLEY	Dd1	Dd2	Pd1	Pd2									
BX BELTS		2VP42	2.9	3.9	3	4									
			Open							TURNS ON MOTOR PULLEY					Closed
BLOWER PULLEY	DATUM DIAMETER	PITCH DIAMETER	6	5 1/2	5	4 1/2	4	3 1/2	3	2 1/2	2	1 1/2	1	1/2	0
2BK160H	15.4	15.7	330	339	348	357	366	375	385	394	403	412	421	430	439
2BK140H	13.4	13.7	378	388	399	409	420	430	441	451	462	472	483	493	504
2BK120H	11.4	11.7	442	455	467	479	491	504	516	528	541	553	565	577	590
2BK110H	10.4	10.7	484	497	511	524	537	551	564	578	591	605	618	631	645
2BK100H	9.4	9.7	534	548	563	578	593	608	622	637	652	667	682	697	711
2BK90H	8.4	8.7	595	611	628	644	661	677	694	710	727	744	760	777	793
2BK80H	7.4	7.7	672	691	709	728	747	765	784	803	821	840	859	877	896
2BK70H	6.4	6.7	772	794	815	837	858	880	901	923	944	965	987	1008	1030
2BK60H	5.4	5.7	908	933	958	984	1009	1034	1059	1084	1110	1135	1160	1185	1211
2BK55H	4.9	5.2	995	1023	1050	1078	1106	1133	1161	1189	1216	1244	1272	1299	1327
2BK50H	4.4	4.7	1101	1132	1162	1193	1223	1254	1285	1315	1346	1376	1407	1438	1468

7-1/2 to 10 HP		MOTOR PULLEY	Dd1	Dd2	Pd1	Pd2									
BX BELTS		2VP60	4.3	5.5	4.7	5.9									
			Open							TURNS ON MOTOR PULLEY					Closed
BLOWER PULLEY	DATUM DIAMETER	PITCH DIAMETER	6	5 1/2	5	4 1/2	4	3 1/2	3	2 1/2	2	1 1/2	1	1/2	0
2BK160H	15.4	15.7	516	527	538	549	560	571	582	593	604	615	626	637	648
2BK140H	13.4	13.7	592	604	617	630	642	655	667	680	693	705	718	730	743
2BK120H	11.4	11.7	693	708	722	737	752	767	781	796	811	826	840	855	870
2BK110H	10.4	10.7	758	774	790	806	822	838	854	871	887	903	919	935	951
2BK100H	9.4	9.7	836	854	871	889	907	925	943	960	978	996	1014	1031	1049
2BK90H	8.4	8.7	932	952	972	991	1011	1031	1051	1071	1091	1110	1130	1150	1170
2BK80H	7.4	7.7	1053	1075	1098	1120	1143	1165	1187	1210	1232	1255	1277	1299	1322

3 to 5 HP		MOTOR PULLEY	Dd1	Dd2	Pd1	Pd2									
BX BELTS		2VP42	2.9	3.9	3	4									
			Open							TURNS ON MOTOR PULLEY					Closed
BLOWER PULLEY	DATUM DIAMETER	PITCH DIAMETER	6	5 1/2	5	4 1/2	4	3 1/2	3	2 1/2	2	1 1/2	1	1/2	0
2B5V278	27.8	28.1	184	189	194	200	205	210	215	220	225	230	235	240	246
2B5V250	25	25.3	205	210	216	222	227	233	239	244	250	256	261	267	273
2B5V234	23.4	23.7	218	224	230	237	243	249	255	261	267	273	279	285	291
2B5V200	20	20.3	255	262	269	276	283	290	297	304	312	319	326	333	340
2B5V184	18.4	18.7	277	284	292	300	307	315	323	331	338	346	354	361	369
2B5V160	16	16.3	317	326	335	344	353	362	370	379	388	397	406	414	423
2B5V154	15.4	15.7	330	339	348	357	366	375	385	394	403	412	421	430	439
2B5V136	12.6	12.9	401	412	423	435	446	457	468	479	490	501	513	524	535
2B5V124	12.4	12.7	407	419	430	441	453	464	475	487	498	509	521	532	543
2B5V110	11	11.3	458	471	483	496	509	522	534	547	560	572	585	598	611

7-1/2 to 10 HP		MOTOR PULLEY	Dd1	Dd2	Pd1	Pd2									
BX BELTS		2VP60	4.3	5.5	4.7	5.9									
			Open							TURNS ON MOTOR PULLEY					Closed
BLOWER PULLEY	DATUM DIAMETER	PITCH DIAMETER	6	5 1/2	5	4 1/2	4	3 1/2	3	2 1/2	2	1 1/2	1	1/2	0
2B5V278	27.8	28.1	289	295	301	307	313	319	325	331	338	344	350	356	362
2B5V250	25	25.3	320	327	334	341	348	355	361	368	375	382	389	395	402
2B5V234	23.4	23.7	342	349	357	364	371	378	386	393	400	408	415	422	429
2B5V200	20	20.3	399	408	416	425	433	442	450	459	467	476	484	493	501
2B5V184	18.4	18.7	434	443	452	461	470	480	489	498	507	517	526	535	544
2B5V160	16	16.3	497	508	519	529	540	550	561	571	582	593	603	614	624
2B5V154	15.4	15.7	516	527	538	549	560	571	582	593	604	615	626	637	648
2B5V136	12.6	12.9	628	642	655	669	682	695	709	722	735	749	762	776	789
2B5V124	12.4	12.7	638	652	666	679	693	706	720	733	747	761	774	788	801
2B5V110	11	11.3	717	733	748	763	779	794	809	824	840	855	870	885	901

15 to 20 HP		MOTOR PULLEY	Dd1	Dd2	Pd1	Pd2									
BX BELTS		2VP75	5.8	7	6.2	7.4									
			Open							TURNS ON MOTOR PULLEY					Closed
BLOWER PULLEY	DATUM DIAMETER	PITCH DIAMETER	6	5 1/2	5	4 1/2	4	3 1/2	3	2 1/2	2	1 1/2	1	1/2	0
2B5V278	27.8	28.1	381	387	393	399	405	411	417	424	430	436	442	448	454
2B5V250	25	25.3	423	430	436	443	450	457	464	470	477	484	491	498	505
2B5V234	23.4	23.7	451	459	466	473	480	488	495	502	509	517	524	531	539
2B5V200	20	20.3	527	535	544	552	561	569	578	586	595	603	612	620	629
2B5V184	18.4	18.7	572	581	590	600	609	618	627	636	646	655	664	673	683
2B5V160	16	16.3	656	667	677	688	698	709	720	730	741	751	762	773	783
2B5V154	15.4	15.7	681	692	703	714	725	736	747	758	769	780	791	802	813
2B5V136	12.6	12.9	829	842	856	869	883	896	909	923	936	949	963	976	990

Troubleshooting

The following table lists causes and corrective actions for possible problems with the fan units. Review this list prior to consulting manufacturer. The following table lists causes and corrective actions for possible problems with the fan units. Review this list before consulting manufacturer.

Airflow Troubleshooting Chart

Problem	Potential Cause	Corrective Action
Fan Inoperative	Blown fuse/Open circuit breaker	Check amperage.
		Check fuse, replace if needed.
		Check circuit breaker.
	Disconnect switch in “OFF” position	Place switch to the “ON” position.
	Incorrect wiring to motor	Inspect motor wiring. Verify connections with wiring diagram located on fan motor.
	Broken fan belt	Replace belt.
	Motor starter overloaded	Check amperage.
		Reset starter.
Motor Overload	Incorrect fan rotation	Verify that the fan is rotating in the direction shown on rotation label.
	Fan speed is too high	Reduce fan RPM.
	Incorrect wiring to motor	Inspect motor wiring. Verify connections with wiring diagram located on fan motor.
	Overload in starter set too low	Set overload to motor’s FLA value.
	Motor HP too low	Determine if HP is sufficient for job.
	Duct static pressure lower than design	Reduce fan RPM.
Insufficient Airflow	Incorrect fan rotation	Verify that the fan is rotating in the direction shown on rotation label.
	Poor outlet conditions	Check duct and connections. There should be a straight duct connection to the outlet.
	Intake damper not fully open	Inspect damper linkage. If the linkage is damaged, replace damper motor.
	Duct static pressure higher than design	Check ductwork. Adjust/resize to eliminate or reduce duct losses.
	Blower speed too low	Increase fan RPM. Do not overload motor.
	Supply grills or registers closed	Open/Adjust.
	Dirty/clogged filters	Clean filters. Replace filters if they cannot be cleaned or are damaged.
	Belt slippage	Adjust belt tension.
Excessive Airflow	Blower speed too high	Reduce fan RPM.
	Filters not installed	Install filters.
	Duct static pressure lower than design	Reduce fan RPM.
Excessive Vibration and Noise	Damaged/Unbalanced wheel	Replace wheel.
	Misaligned pulleys	Align pulleys
	Fan is operating in unstable region of fan curve	Refer to performance curve for fan.
	Bearings need lubrication/Damaged bearing	Lubricate bearings, replace if damaged.
	Fan speed is too high	Reduce fan RPM.
	Dirty/oily belt(s)	Clean belt(s).
	Belt(s) too loose	Adjust, replace if necessary.
	Worn belt(s)	Replace belt(s).

MSC Troubleshooting

Fault	Problem	Potential Cause	Corrective Action
Feedback Fault	Feedback Fault on MSC Display	Disconnected/faulty wiring	Secure connections to fan. If faulty wiring is found, repair or replace as required.
		No feedback for 30 seconds	Check parameters
		Less than 70% of RPM	Check duct/fan for obstructions.
Modbus	Modbus fault on MSC Display	Faulty Cat 5 connection/cable	Find and replace faulty cable
		ECPM03 does not recognize device	Verify Modbus # on device is set correctly.
Variable Device Fault	Motor not responding to changes made on variable device (potentiometer)	Defective potentiometer	Replace potentiometer
		Faulty wiring to motor	Find and replace faulty wiring.
Motor not responding	Motor not functioning as expected	2-Speed switch not working	Check switch and wiring.
		Wiring to motor defective	Find and replace faulty wiring.
		Check for other faults on MSC display	If no other faults are present, motor maybe defective.

TURN OFF POWER TO THE MOTOR WHILE PROGRAMMING THIS DEVICE.

- If the device has a potentiometer or a 2-Speed switch, a jumper wire can be placed in between the 10V In and 10V Out terminals to rule out a defective device. This will cause the motor to go to HIGH SPEED.
- The IO STATUS menu can be used to verify the inputs and outputs of the device are functioning as expected.
- The FAULT HISTORY menu can be used to keep track of faults while working on the device.

MAINTENANCE

To guarantee trouble-free operation of this fan, the manufacturer suggests following these guidelines. Most problems associated with fan failures are directly related to poor service and maintenance.

Please record any maintenance or service performed on this fan in the documentation section located at the end of this manual.

General Maintenance

1. Fan inlet and approaches to ventilator should be kept clean and free from any obstruction.
2. All fasteners and electrical connections should be checked for tightness each time maintenance checks are performed before restarting unit.
3. These units require very little attention when moving clean air. Occasionally oil and dust may accumulate, causing imbalance. If the fan is installed in a corrosive or dirty atmosphere, periodically inspect and clean the wheel, inlet, and other moving parts to ensure smooth and safe operation.
4. Motors are normally permanently lubricated. Check bearings periodically. If they have grease fittings lubricate each season. Use caution when lubricating bearings. Wipe the fittings clean and lubricate the unit while rotating with your hand. **Caution: Use care when touching the exterior of an operating motor. Components may be hot enough to burn or cause injury.**
5. If bearings require lubrication, very little is needed. A general rule is one-half pump from a grease gun for 1/2” to 1-7/16” shaft diameters and one full pump for 1-11/16” and large diameter shafts for every 1500 to 3000 hours of operation. A lithium-based grease should be used. Bearings should be rotated as they are lubricated to evenly distribute the grease, either by hand or via extended grease lines. Do not attempt to grease bearings from inside the enclosure while the motor is energized. **Caution: Bearings are sealed, over-greasing can cause damage to the bearings. Do not grease until grease comes out of seals. Only add the appropriate amount of grease.**

2 Weeks After Start-up

1. Belt tension should be checked after the first 2 weeks of fan operation. **See “Pulley Alignment/ Proper Belt Tension” on page 45.**
2. All fasteners should be checked for tightness each time maintenance checks are performed before restarting unit.

Every 3 Months

1. Belt tension should be checked quarterly. **See “Pulley Alignment/Proper Belt Tension” on page 45.** Over-tightening will cause excessive bearing wear and noise. Too little tension will cause slippage at start-up and uneven wear.
2. Filters need to be cleaned and/or replaced quarterly, and more often in severe conditions. Washable filters can be washed in warm soapy water. When re-installing filters, be sure to install with the **airflow in the correct direction** as indicated on the filter.

Yearly

1. Inspect bearings for wear and deterioration. Replace if necessary.
2. Inspect belt wear and replace torn or worn belts.
3. Inspect bolts and set screws for tightness. Tighten as necessary.
4. Inspect motor for cleanliness. Clean exterior surfaces only. Remove dust and grease and grease from the motor housing to ensure proper motor cooling. Remove dirt and grease from the wheel and housing to prevent imbalance and damage.

Notes

Start-up and Maintenance Documentation

START-UP AND MEASUREMENTS SHOULD BE PERFORMED AFTER THE SYSTEM HAS BEEN AIR BALANCED (Warranty will be void without completion of this form)

Job Information

Job Name		Service Company	
Address		Address	
City		City	
State		State	
Zip		Zip	
Phone Number		Phone Number	
Fax Number		Fax Number	
Contact		Contact	
Purchase Date		Start-up Date	

Fan Unit Information

Refer to the start-up procedure in this manual to complete this section.

Name Plate and Unit Information	
Model Number	
Serial Number	
Volts	
Hertz	
Phase	
FLA	
HP	
Blower Pulley	
Motor Pulley	
Belt Number	

Blower Rotation	
Correct	
Incorrect	

Field Measure Information	
Voltage	
Amperage**	
RPM	

Cleaning and Maintenance

Date	Service Performed	Date	Service Performed

**If measured amps exceed the FLA rating on the nameplate, fan RPM must be reduced to decrease the measured amps below the nameplate FLA rating.

As a result of our dedication to constant improvements and quality, the MANUFACTURER reserves the right to update specifications without notice. Please refer to MANUFACTURER'S website for up to date documentation.

Scan for Online Manual

384 Gallatin Park Dr. Suite 201, Bozeman, MT 59715
(O) 406.585.7333 (F) 406.585.7666

On Broadway

Exhaust Fans

Exhaust Fans - ACME

TAGS: EF-3, EF-4 – ACME Model XDEC

TAGs: EF-3 & EF-4

Form 613095

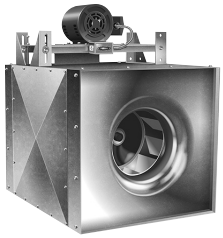

Read and Save These Instructions

INSTALLATION & MAINTENANCE INSTRUCTIONS
Models XB and XD

FOR EC MOTOR WIRING ON MODELS XD

See form 613084 for wiring diagrams on EC Motors supplied with fan or online at www.acmefan.com

EC MOTOR

RECEIVING AND INSPECTION

Immediately upon receipt of a shipment, carefully inspect for damage and shortage. Turn the impeller by hand to see that it turns freely and does not bind. If any damage and/or shortage is detected or suspected, the carrier must be asked to conduct an inspection. The consignee's representative should not accept a shipment without a notation on the delivery receipt indicating items not delivered or the apparent extent of damage.

When a shipment is opened and damage is found which was not evident externally (concealed damage), it is mandatory that the consignee request an immediate inspection by the carrier. Report any damage to the carrier within 15 days. Failure to report damage within the above time limit will result in rejection of a claim.

HANDLING

When handling fans and their accessories, always use equipment and methods that will not cause damage. Fans should be lifted using slings and padding or spreaders to avoid damage.

CAUTION! Always make sure that all lifting and handling equipment and techniques conform to current safety standards.

Avoid lifting fans in a way that will bend or distort fan parts. Never pass slings or timbers through the orifices of fan.

CAUTION! Do not lift by the fan hood. Fans with special coatings or paints must be protected in handling to prevent damage.

STORAGE

Fans are protected against damage during shipment. If they cannot be installed and put into operation immediately upon receipt certain precautions are necessary to prevent deterioration during storage. Responsibility for integrity of fans and accessories during storage must be assumed by the user. The manufacturer will not be responsible for damage during storage. These suggestions are provided solely as a convenience to the user, who shall make his own decision as to whether to use any or all of them.

INDOOR: The ideal storage environment for fans and accessories is indoors, above grade, in a low humidity atmosphere which is sealed to prevent the entry of blowing dust, rain, or snow. Temperatures should be evenly maintained at between 70°F and 105°F (wide temperature swings may cause condensation and "sweating" of metal parts). Windows should be covered to prevent temperature variations caused by sunlight. Provide thermometers and humidity indicators at several points and maintain the atmosphere at 40% relative humidity, or lower.

It may be necessary to use trays of renewable desiccant or portable dehumidifier to remove moisture from the air in the storage enclosure.

Thermostatically controlled portable heaters (vented to outdoors) may be required to maintain even temperatures inside the enclosure.

CAUTION! Provide fire extinguishers, or fire alarms, or emergency response communication to protect building and equipment against fire damage. Be sure that building and storage practices meet all local, state and federal fire and safety codes.

The following fans or accessories must be stored indoors, in a clean dry atmosphere:

a. Propeller wall fans not in wall housings.
b. Any fan protected by a cardboard carton.
c. Motors dismounted from fans.
d. Spare wheels or propellers.
e. Belts, sheaves, bushings and other parts when not mounted on fan.
f. Boxes, bags or cartons of hardware.
g. Curbs
h. Dampers

Remove any accumulations of dirt, water, ice or snow and wipe dry before moving indoor storage. Allow cold parts to reach room temperature to avoid "sweating" of metal parts. Open boxes or cartons. Remove any accumulated moisture; if necessary use portable electric heaters to dry parts and packages. Leave coverings loose to permit air circulation and to permit periodic inspection.

Rotate wheels or propellers by hand to distribute bearing grease over the entire bearing surfaces.

Store at least 3 ½" off the floor on wooden blocks covered with moisture proof paper or polyethylene sheathing. Provide aisles between parts and along all walls, to permit air circulation and space for inspection.

OUTDOOR: Fans designed for outdoor use may be stored outdoors, if absolutely necessary. The storage area should be reasonably level and drained or ditched to prevent accumulation of water. Fencing and lighting for security are desirable. Roads or aisles for portable cranes and hauling equipment are needed. Consider the use of drift fencing to minimize accumulation of blowing snow or dirt.

The following fans may be stored outdoors, if dry indoor storage space is not available:

a. Fans intended for outdoor use that are crated in wood.
b. Wall fans installed in wall housings.

All fans must be supported on wooden blocks or timbers above water or normal snow levels. Provide enough blocking to prevent settling into soft ground. Fans should be set in place using the directional arrow markings on the crate as a guide.

Locate pieces far enough apart to permit air circulation, sunlight, and space for periodic inspection. Place all parts on their supports so that rain water will run off, or to minimize water accumulation. **Do not** cover parts with plastic film or tarps - these cause condensation of moisture from the air passing through heating and cooling cycles.

Fan wheels and propellers should be blocked to prevent spinning caused by strong winds.

INSPECTION AND MAINTENANCE DURING STORAGE

Inspect fans and accessories at least once per month, while in storage. Log results of inspection and maintenance performed. A typical log entry should include the following:

a. Date
b. Inspector's Name
c. Name of Fan
d. Location
e. Condition of Paint or Coating
f. Is moisture present?
g. Is dirt accumulated?
h. Corrective steps taken?

If moisture or dirt accumulations are found on parts, the source should be located and eliminated. Fans should be rotated at each inspection by hand ten to fifteen revolutions to redistribute the motor and bearing lubricant.

If paint deterioration begins, consideration should be given to touch-up or repainting. Fans with special coatings may require special techniques for touch-up or repair.

Machined parts coated with rust preventive should be restored to good condition promptly if signs of rust occur. The most critical items are pulleys, shafts and bearing locking collars. At the first sign of rusting on any of the above parts, remove the original rust preventive coating with petroleum solvent and clean lint-free cloths. Polish any remaining rust from surfaces with crocus cloth or fine emery paper and oil. **Do not** destroy the continuity of the surfaces. Wipe clean with lint-free cloths and recoat surfaces evenly and thoroughly with Tectly 506 (Ashland Oil Company) or equal. For hard to reach internal surfaces or for occasional use, consider using Tectly 511M Rust Preventive or WD40 or equal.

REMOVING FROM STORAGE

As fans are removed from storage to be installed in their final location, they should be protected and maintained in similar fashion, until the fan equipment goes into operation.

INSTALLATION

1. These units are not air tight and should not be used where escape of contaminated air would cause problems.

   CAUTION! This unit has rotating parts and safety precautions should be exercised during installation, operation and maintenance.

2. **WARNING! Do not** use in hazardous environments where the fan's electrical system could provide ignition to combustible or flammable materials, unless the unit is specifically built for hazardous environments.

3. Impeller Adjustment: Turn centrifugal impeller by hand to make sure it rotates freely. If impeller hits orifice, remove side panel (both sides are removable) and motor or drive enclosure panel as in shown Figure 1.

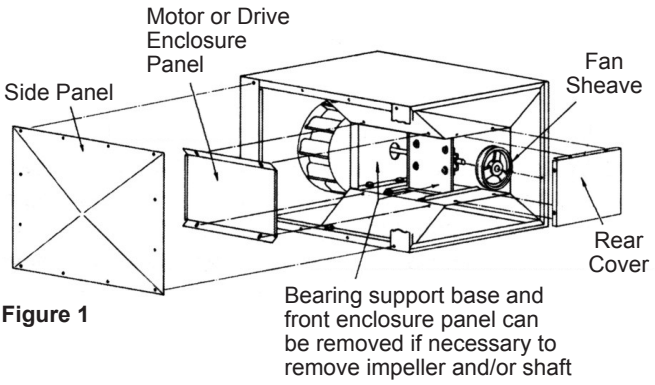

Figure 1

4. Adjustment is made as follows:

   Direct Driven Units
   Loosen bolts holding the motor to the mounting frame. This will allow free movement of the impeller in all directions for adjustment. **Do not** loosen the set screws in the impeller hub since this will only allow movement in or out on the motor shaft. Tighten all bolts before operating the unit.

   Belt Driven Unit
   The bearing support base and the bearing lower housing are slotted for adjustment. Loosen the bolts indicated in Figure 2 and center the impeller over the orifice. Tighten all bolts before operating the unit.

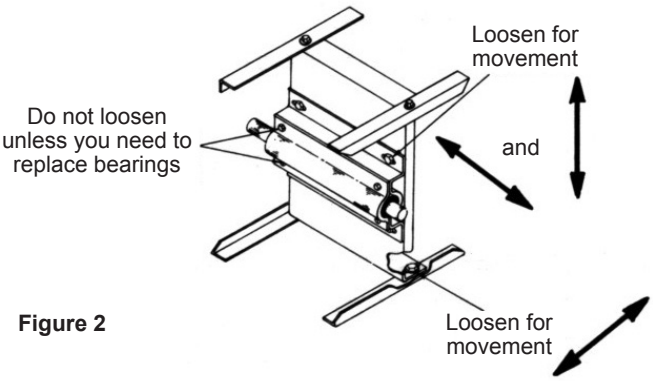

Figure 2

5. Check the pulley alignment and belt tension. Adjust the belt tension using motor base jack screws. Belt should depress its width when pressed firmly inward at midway point between the pulleys. Replace all panels and tighten corresponding bolts.

6. If unit is to be equipped with isolators and/or support brackets they should be attached at this time using the mounting instructions (Form 613101) included with them.

7. Securely support the unit and attach the duct work.

8. Units used outdoors should be installed to provide maximum weather protection. Direct driven units should be positioned so that the breather tube to the motor compartment will not let moisture enter. Belt driven units should include a motor cover to protect the motor and belt enclosure opening from moisture.

9. **CAUTION!** Before proceeding, make sure electrical service to the fan is locked in the "**OFF**" position.

10. All wiring should be in accordance with local ordinances and the National Electric Code.

11. **WARNING!** Check the voltage at the fan to see if it corresponds with the motor nameplate. High or low voltage can seriously damage the motor. Extra care should be taken when wiring two speed motors since improper connections will damage the motor and void the motor warranty. On belt driven units, leave enough slack in wiring to allow for motor movement when adjusting belt tension.

12. Apply power momentarily and compare the rotation of the impeller with the directional arrow on fan. **WARNING!** Operation in the wrong direction will deliver air but will overload the motor to the extent of blowing fuses and seriously damaging the motor. In the case of three phase motors, the direction can be changed by interchanging any two of the three motor leads. In the case of single phase motors, the reversing instructions will appear on the wiring diagram in the motor wiring compartment.

13. **CAUTION!** Guards must be installed when the fan is within reach of personnel or within eight (8) feet (2.5m) of working level or when deemed advisable for safety.

MAINTENANCE

1. Under normal usage, no spare parts are recommended for one year of operation. Recommended spare parts are shown on Pages 5 and 6.
2. **CAUTION!** Before proceeding, make sure electrical service to the fan is locked in the "**OFF**" position.

   WINDMILLING: Even when the power supply is locked out, fans may cause injury or damage if the impeller is subject to "windmilling" which is the turning of the impeller and drive components due to a draft in the system. To guard against this hazard, the impeller should be secured to physically restrict rotational movement.
3. Acme Duplex Split pillow block bearings are prelubricated and do not require relubrication. Units with pillow block bearings have grease fittings and, under normal operating conditions, will need no relubrication for 3 to 5 years. If relubrication is required, use a grease conforming to NLGI No. 2. **CAUTION!** Lubricating bearings with a high pressure gun can blow bearing seals and overfill the bearing with grease. This condition can result in excessive churning and overheating. For normal operating conditions it is standard practice to fill only 30% of the bearing void with grease. **Do not** over lubricate.
4. Motor bearings are prelubricated. Consult information printed on the motor for lubrication instructions.
5. On belt driven units, check belt tension after the first 48 hours of operation and thereafter annually. Belt should depress its width when pressed firmly inward at midway point between the pulleys. Too much tension will damage the bearings. The belt should be tight enough to prevent slippage. When replacing a worn belt, replace the motor pulley if "shoulder" is worn in groove. **WARNING! Do not** replace the motor pulley with a larger diameter pulley. **Do not** replace the fan pulley with one smaller in diameter. The pulley ratios are set so that the motor will not be overloaded. **Do not** operate at higher speeds than that cataloged for this equipment.
6. If it should become necessary to remove the impeller, first remove the motor and impeller or shaft, bearing and impeller assembly (see Figure 1). On model sizes 120, 137 and 161 there is a sleeve which fits inside the impeller hub. To remove the impeller from the shaft, completely remove the two socket head cap screws that go through the sleeve. The impeller will then slide off the sleeve and the set screws attaching the sleeve can be loosened allowing its removal. The impellers on larger size units are attached with a roll pin. Remove the roll pin by driving it out with a drift pin.
7. On belt driven units: If impeller shaft bearings need replacement, replace with bearing comparable to the original equipment. If Acme Duplex Split pillow block bearings are used, install new bearings into neoprene rings, check correct position of impellers with orifice, position bearings in the die-formed recess and tighten the set screws. Replace the die-formed bearing cap and tighten the four bolts.

   NOTE: If locking collar type bearing is used, collar must first be positioned against the inner race on the bearing nearest the impeller and turned in the direction of impeller rotation with a drift pin and hammer until it locks. Locking collars must be on the inboard (facing) sides of the bearings. Secure the bearing to the shaft with set screws. Lock and secure the other bearing to the shaft in the same manner.

   NOTE: If pillow block type bearings are used, slide bearings onto shaft to desired location and bolt bearing block securely to support base. Slide shaft back and forth in secured bearing (**do not** drive with hammer) and rotate to make certain it turns freely. Check correct position of propeller with inlet orifice. Then secure bearings to shaft by tightening set screws.

SET SCREW TIGHTENING SCHEDULE

1. Before initial operation of the fan, tighten set screws according to the procedure outlined below.
2. After 500 operating hours or three months, whichever comes first, tighten set screws to the full recommended torque.
3. At least once a year, tighten set screws to the full recommended torque.

PROCEDURE FOR TIGHTENING SET SCREWS IN BEARINGS AND HUBS

<u>One Set Screw Application</u>

Using a torque wrench, tighten the set screw to the torque recommended in Table 1.

<u>Two Set Screw Application</u>

1. Using a torque wrench, tighten one set screw to half of the torque recommended in Table 1.
2. Tighten the second set screw to the full recommended torque.
3. Tighten the first set screw to the full recommended torque.

Table 1. Recommended Tightening Torque for Set Screws

Set Screw Diameter	Torque (in-lbs)
#10	35
1/4	80
5/16	126
3/8	240
7/16	384
1/2	744
9/16	1080
5/8	1500
3/4	2580
7/8	3600
1	5400

VARIABLE FREQUENCY DRIVES AND MOTORS

There are occasions when a Variable Frequency Drive (VFD) will cause poor motor performance and possible damage. To avoid these problems, the Company recommends the following:

1. Select compatible motor and VFD inverter; if possible, the motor and the inverter should be from the same manufacturer or at least the inverter selected should be recommended by the motor manufacturer.
2. A motor shaft grounding system should be used to prevent motor bearing damage from eddy currents.

NOTE: The Company will not honor motor warranty claims if the customer fails to follow these recommendations.

BELT DRIVE CENTRIFUGAL INLINE FAN RPM SELECTION TABLE

Model Size	Power	Fan RPM vs. Number of Turns from Full Closed										
	HP	0	1/2	1	1 1/2	2	2 1/2	3	3 1/2	4	4 1/2	5
090E1	.25	2177	2118	2058	1999	1939	1880	1821	1761	1702	1642	1583
090E2	.25	2492	2428	2363	2299	2234	2170	2105	2041	1976	1912	1847
090F	.33	2717	2637	2558	2478	2398	2319	2239	2159	2079	2000	1920
090G	.50	3196	3110	3023	2937	2851	2765	2678	2592	2506	2419	2333
120E1	.25	1375	1317	1259	1201	1143	1084	1026	968	910	——	——
120E2	.25	1570	1520	1470	1420	1370	1320	1270	1220	1170	1120	1070
120F	.33	1725	1667	1608	1550	1491	1433	1374	1316	1257	1199	1140
120G	.50	2060	1994	1928	1862	1796	1730	1664	1598	1532	1466	1400
120H	.75	2335	2261	2186	2112	2037	1963	1888	1814	1739	1665	1590
120J	1.00	2570	2507	2443	2380	2316	2253	2189	2126	2062	1999	1935
137F	.33	1365	1322	1278	1235	1191	1148	1104	1061	1017	974	930
137G	.50	1605	1551	1496	1442	1387	1333	1278	1224	1169	1115	1060
137H	.75	1830	1780	1729	1679	1628	1578	1527	1477	1426	1376	1325
137J	1.00	2060	1994	1928	1862	1796	1730	1664	1598	1532	1466	1400
137K	1.50	2310	2247	2183	2120	2056	1993	1929	1866	1802	1739	1675
137L	2.00	2490	2437	2383	2330	2276	2223	2169	2116	2062	2009	1955
161F	.33	1055	1019	983	947	911	875	839	803	767	731	695
161G	.50	1210	1172	1133	1095	1056	1018	979	941	902	864	825
161H	.75	1365	1322	1278	1235	1191	1148	1104	1061	1017	974	930
161J	1.00	1570	1520	1470	1420	1370	1320	1270	1220	1170	1120	1070
161K	1.50	1710	1672	1634	1596	1558	1520	1482	1444	1406	1368	1330
161L	2.00	1865	1819	1773	1727	1681	1635	1589	1543	1497	1451	1405
161M	3.00	2210	2163	2115	2068	2020	1973	1925	1878	1830	1783	1735
200H	.75	985	954	922	891	859	828	796	765	733	702	670
200J	1.00	1055	1023	990	958	925	893	860	828	795	763	730
200K	1.50	1250	1211	1172	1133	1094	1055	1016	977	938	899	860
200L	2.00	1410	1371	1332	1293	1254	1215	1176	1137	1098	1059	1020
200M	3.00	1525	1492	1459	1426	1393	1360	1327	1294	1261	1228	1195
200N	5.00	1885	1854	1822	1791	1759	1728	1696	1665	1633	1602	1570
245H	.75	645	625	604	584	563	543	522	502	481	461	440
245J	1.00	735	712	688	665	641	618	594	571	547	524	500
245K	1.50	855	829	802	776	749	723	696	670	643	617	590
245L	2.00	965	935	905	875	845	815	785	755	725	695	665
245M	3.00	1100	1076	1052	1028	1004	980	956	932	908	884	860
245N	5.00	1295	1271	1246	1222	1197	1173	1148	1124	1099	1075	1050
300J	1.00	520	504	487	471	454	438	421	405	388	372	355
300K	1.50	595	577	558	540	521	503	484	466	447	429	410
300L	2.00	670	652	633	615	596	578	559	541	522	504	485
300M	3.00	775	759	742	726	709	693	676	660	643	627	610
300N	5.00	875	859	842	826	809	793	776	760	743	727	710
300P	7.50	1010	992	973	955	936	918	899	881	862	844	825
300R	10.00	1135	1114	1093	1072	1051	1030	1009	988	967	946	925
365K	1.50	450	436	422	408	394	380	366	352	338	324	310
365L	2.00	505	491	477	463	449	435	421	407	393	379	365
365M	3.00	555	543	531	519	507	495	483	471	459	447	435
365N	5.00	675	663	650	638	625	613	600	588	575	563	550
365P	7.50	760	746	732	718	704	690	676	662	648	634	620
365R	10.00	815	803	790	778	766	754	741	729	717	705	692
425K	1.50	380	369	359	348	338	328	318	307	296	285	255
425L	2.00	415	403	391	379	368	356	345	333	322	310	300
425M	3.00	475	463	451	439	427	415	403	391	379	367	355
425N	5.00	565	553	541	529	517	505	493	481	469	457	445
425P	7.50	645	633	621	609	597	585	573	561	549	537	525
425R	10.00	690	675	660	646	631	617	602	588	573	559	545

Actual speeds may vary as much as ±5%.

Based on motor RPM of 1725.

Belt Drive

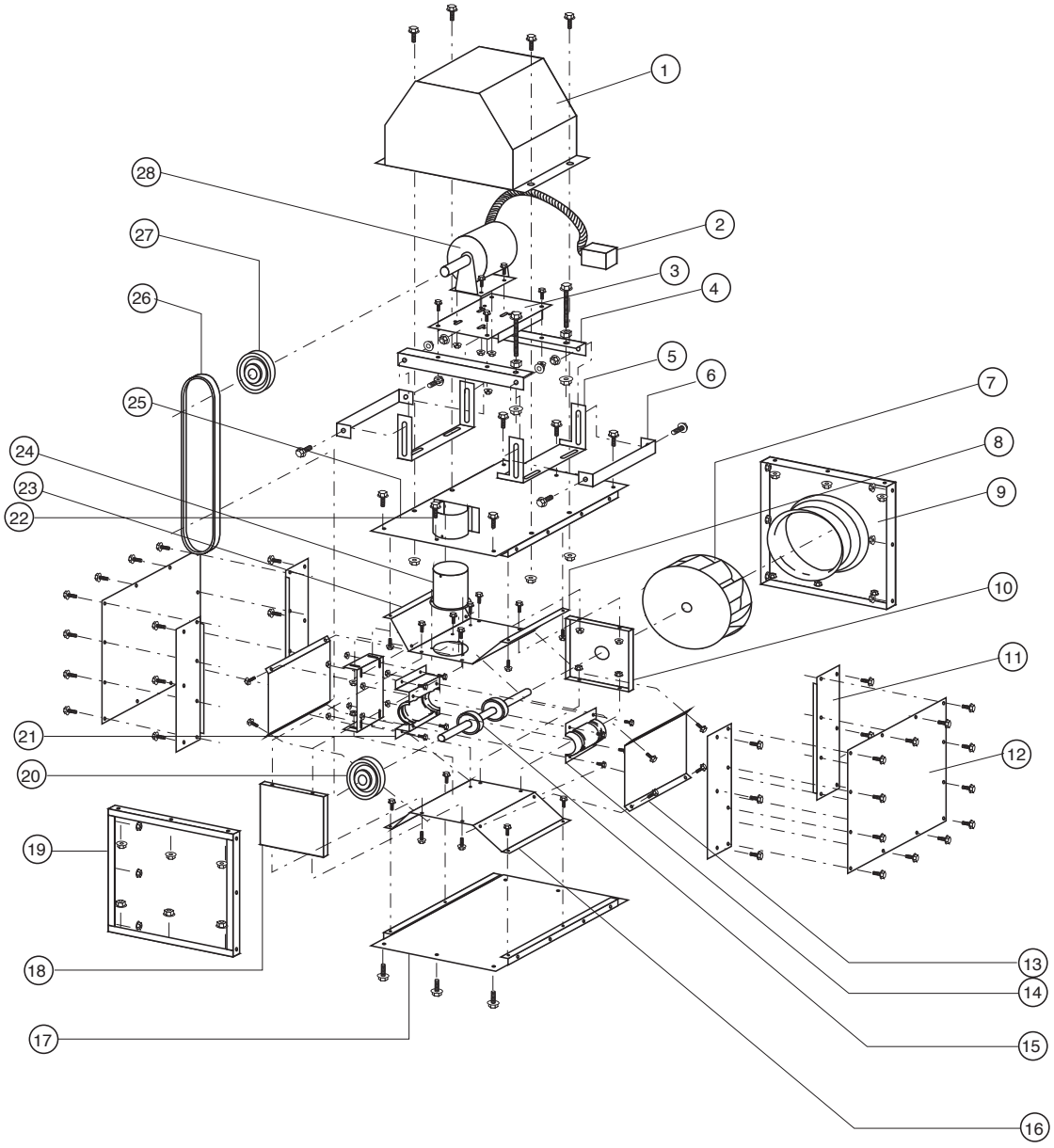

PARTS LIST LEGEND					
No.	**Description**	**Qty.**	**No.**	**Description**	**Qty.**
1	Motor Cover	1	15	Shaft and Bearing Assembly*	1
2	Disconnect Switch	1	16	Bearing Compartment Bottom	1
3	Motor Base	1	17	Bottom Panel	1
4	Motor Base Rails	2	18	Motor Compartment Back	1
5	Motor Rail Supports	2	19	Outlet Frame	1
6	Motor Support Brackets	2	20	Fan Sheave*	1
7	Impeller*	1	21	Bearing Base	1
8	Bearing Compartment Top	1	22	Rain Shield	1
9	Inlet Orifice	1	23	Bearing Compartment Top	1
10	Bearing Compartment Front	1	24	Belt Tube	1
11	Side Panels	4	25	Top Panel	1
12	Access Panels	2	26	Belt*	1
13	Bearing Compartment Side	2	27	Motor Sheave*	1
14	Bearing Cap	1	28	Motor*	1

* Recommended Spare Parts

Direct Drive

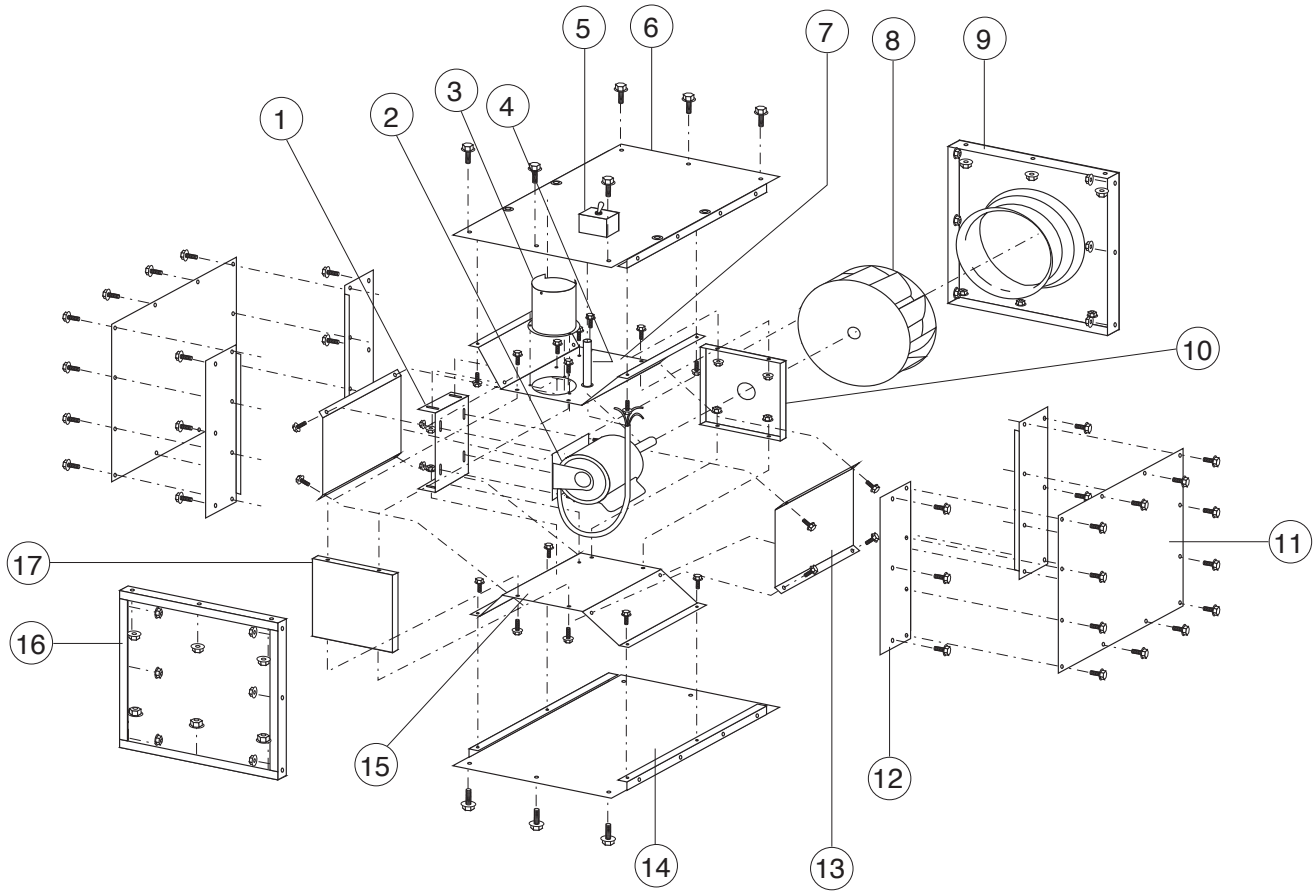

PARTS LIST LEGEND					
No.	**Description**	**Qty.**	**No.**	**Description**	**Qty.**
1	Motor Base	1	10	Motor Compartment Front	1
2	Motor*	1	11	Access Panels	2
3	Breather Tube	1	12	Side Panels	4
4	Wiring Post	1	13	Motor Compartment Side	2
5	Disconnect Switch	1	14	Bottom Panel	1
6	Top Panel	1	15	Motor Compartment Bottom	1
7	Motor Compartment Top	1	16	Outlet Frame	1
8	Impeller*	1	17	Motor Compartment Back	1
9	Inlet Orifice	1			

* Recommended Spare Parts

This page intentionally left blank.

TERMS AND CONDITIONS OF SALE

ACCEPTANCE All orders and sales are subject to written approval and acceptance by an executive officer of Acme Engineering & Manufacturing Corporation at Muskogee, Oklahoma, (the "Company") and are not binding on the Company until so approved.

DELIVERY All shipping and delivery dates are estimated only. No delays in delivery will subject the Company to any costs, damages or fees for late delivery. Delivery of the products herein specified shall be made F.O.B. point of shipment, unless otherwise stated. The Company shall not be liable for delay due to causes beyond its reasonable control, such as Acts of God, acts of the purchaser, acts of civil or military authorities, priorities, fires, strikes, floods, epidemics, war, riots, delays in transportation, car shortages, and inability, due to reasons beyond its reasonable control, to obtain necessary labor, material, or manufacturing facilities. In the event of such a delay, the date of delivery shall be extended for a period equal to the time lost by reason of the delay.

TERMS OF PAYMENT If, in the judgment of the Company, the financial condition of the purchaser at any time does not justify continuation of manufacture or shipment on the terms of payment specified, the Company may require full or partial payment in advance.

Pro rata payments shall become due as shipments are made. Each shipment or delivery shall constitute a separate sale, and the default of any shipment or delivery shall constitute a separate sale, and the default of any shipment or delivery shall not vitiate the contract as to other shipments or deliveries.

SALES AND SIMILAR TAXES The Company's prices do not include sales, use, excise, or similar taxes. Consequently, in addition to the price specified herein, the amount of any present or future sales, use, excise, or other similar tax applicable to the sale of the product herein shall be paid by the Purchaser, or in lieu thereof the Purchaser shall provide the Company with a tax exemption certificate acceptable to the taxing authorities.

CANCELLATION Any contract resulting from the Purchaser's order may be canceled by the Purchaser only by negotiations and upon payments of reasonable cancellation charges which will take into account expenses already incurred and commitments made by the Company.

DESIGN CHANGES The Company reserves the right to make changes in design, improvements and additions in and to its products any time without imposing any liability or obligations to itself to apply or install the same in any product manufactured by it.

TITLE The title and right of possession of the products sold herein shall remain with the Company and such products shall remain personal property until all payments herein (including deferred payments whether evidenced by notes or otherwise) shall have been made in full in cash and the Purchaser agrees to do all acts necessary to perfect and maintain such right and title in the Company.

PRICE ADJUSTMENTS Prices are subject to change upon notice by the Company. Prices on existing orders are subject to surcharges in the event of cost increases of metals and transportation. All complete component accessory material manufactured by others and furnished with the Company's products such as motors, drives, vibration equipment, controls or other completely assembled component structures, are subject to adjustment to the price at time of shipment regardless of the date of original order entry.

SAFETY ACCESSORIES The Company manufactures products designed to serve multiple applications and offers a wide range of safety equipment, including guards and other devices, as may be required to meet customer specifications. Without exception, the Company recommends that all orders include applicable safety devices. Products ordered without applicable safety devices is clearly the responsibility of the Purchaser. Further, the Purchaser warrants that it has determined and acquired any and all safety devices required for products sold by the Company. Weather covers and guards for motor and V-belt drives, couplings, shafts and bearings, along with inlet and outlet screens, are optional accessories noted in the price list.

GOVERNING LAW The rights, obligations and remedies of Purchaser and the Company, the interpretation of these terms and conditions and the sale of products by the Company shall be governed by Oklahoma law, without regard to any principles of conflict of laws.

ARBITRATION Any dispute arising under or in connection with these terms and conditions or the sale of products shall be settled by binding arbitration administered by the American Arbitration Association under its Commercial Arbitration Rules, and judgment on the award rendered by the arbitrator may be entered in any court having jurisdiction thereof. The dispute shall be resolved by one neutral arbitrator who shall have no affiliation with either Purchaser or the Company and shall be selected by the American Arbitration Association office in Dallas, Texas. The arbitration proceedings shall be held in Muskogee, Oklahoma.

APPLICABLE DOCUMENTS The agreement between the Company and the Purchaser relating to the products includes these terms and conditions of sale, any applicable installation and maintenance instructions provided by the Company and any terms appearing on the Company's quotation, sales order acknowledgment and invoice.

WARNING Acme products are designed and manufactured to provide reliable performance but they are not guaranteed to be 100% free of defects. Even reliable products will experience occasional failures and this possibility should be recognized by the Purchaser and all End Users. If these products are used in a life support ventilation system where failure could result in loss or injury, the Purchaser and all End Users should provide adequate back-up ventilation, supplementary natural ventilation or failure alarm system, or acknowledge willingness to accept the risk of such loss or injury.

WARNING DO NOT use in HAZARDOUS ENVIRONMENTS where fan's electrical system could provide ignition to combustible or flammable materials unless unit is specifically built for hazardous environments. Comply with all local and national safety codes including the National Electrical Code (NEC) and National Fire Protection Act (NFPA).

CAUTION Guards must be installed when fan is within reach of personnel or within eight (8) feet (2.5 m) of working level or when deemed advisable for safety.

DISCLAIMER The Company has made a diligent effort to illustrate and describe the products accurately in all Company literature; however such illustrations and descriptions are for the sole purpose of identification and do not express or imply any warranty.

LIMITED WARRANTY

WARRANTY AND DISCLAIMER: the Company extends this limited warranty to the original purchaser and warrants that products supplied by the Company, shall be free from original defects in workmanship and materials for two years from date of shipment (except for the warranty periods noted for products listed below), provided same have been properly handled, stored, installed, serviced, maintained and operated. This warranty shall not apply to products which have been altered or repaired without the Company's express authorization, or altered or repaired in any way so as, in the Company's judgment, to affect its performance or reliability, nor which have been improperly installed or subjected to misuse, negligence, or accident, or incorrectly used in combination with other substances. The Purchaser assumes all risks and liability for results of use of all products.

Evaporative cooling pads are warranted to be free of defects in materials and workmanship for a period of two years from date of shipment provided same have been properly handled, stored, installed, serviced, maintained and operated; and further, not subjected to excessive heat, corrosive agents or chemicals, or mechanical abuse that may cause tearing, crushing or undue deterioration, nor used on a system or in a manner other than that for which it was designed as explained in the product literature.

The following products are warranted to be free of defects in materials and workmanship for the periods shown from date of shipment: Acme's exclusive duplex split pillow block bearings and shaft five years, belts one year, Polyethylene tubing 90 days, and DDP fan lifetime warranty on its stainless steel propeller, cone, and housing.

LIMITATION OF REMEDY AND DAMAGES: All claims under this warranty must be made in writing and delivered to P. O. Box 978, Muskogee, Oklahoma, 74402, within 15 days after discovery of the defect and prior to the expiration of two years from the date of shipment by the Company of the product claimed defective, and Purchaser shall be barred from any remedy if Purchaser fails to make such claim within such period.

Within 30 days after receipt of a timely claim, the Company shall have the option either to inspect the product while in Purchaser's possession or to request Purchaser to return the product to the Company at Purchaser's expense for inspection by the Company. The Company shall replace, or at its option repair, free of charge, any product it determines to be defective, and it shall ship the repaired or replacement product to Purchaser F.O.B. point of shipment; provided, however, if circumstances are such as in the Company's judgment to prohibit repair or replacement to remedy the warranted defects, the Purchaser's sole and exclusive remedy shall be a refund to the Purchaser of any part of the invoice price, paid to the Company, for the defective product or part.

The Company is not responsible for the cost of removal of the defective product or part, damages due to removal, or any expenses incurred in shipping the product or part to or from the Company's plant, or the installation of the repaired or replaced product or part.

The warranties set forth above do not apply to any components, accessories, parts or attachments manufactured by other manufacturers; such being subject to the manufacturer's warranty, if any. To the extent not prohibited by the manufacturer's warranty, the Company shall pass through to Purchaser such manufacturer's warranty.

THE COMPANY'S WARRANTY IS IN LIEU OF ALL OTHER WARRANTIES, EXPRESS OR IMPLIED, ARISING BY LAW OR OTHERWISE, INCLUDING WITHOUT LIMITATION THE IMPLIED WARRANTIES OF MERCHANTABILITY AND FITNESS FOR A PARTICULAR PURPOSE, WHICH ARE HEREBY EXPRESSLY DISCLAIMED AND WAIVED. THIS WARRANTY CONSTITUTES THE COMPANY'S SOLE AND EXCLUSIVE WARRANTY FOR DEFECTIVE GOODS AND PURCHASER'S SOLE AND EXCLUSIVE REMEDY FOR DEFECTIVE PRODUCTS.

No employee, agent, dealer, or other person is authorized to give any warranties on behalf of the Company or to assume for the Company any other liability in connection with any of its products except in writing and signed by an officer of the Company.

REPLACEMENT PARTS If replacement parts are ordered, purchaser warrants that the original components in which these replacement parts will be placed are in satisfactory working condition, and when said replacement parts are installed, the resultant installation will operate in a safe manner, at speeds and temperatures for which the original product was purchased.

TECHNICAL ADVICE AND RECOMMENDATIONS, DISCLAIMER: Notwithstanding any past practice or dealings or any custom of the trade, sales shall not include the furnishing of technical advice or assistance or system design. Any such assistance shall be at the Company's sole option and may be subject to additional charge.

The Company assumes no obligation or liability on account of any recommendations, opinions or advice as to the choice, installation or use of products. Any such recommendations, opinions or advice are given and shall be accepted at Purchaser's and End User's risk and shall not constitute any warranty or guarantee of such products or their performance.

LIMITATION OF LIABILITY The cumulative liability of the Company to the Purchaser and any other persons for all claims in any way relating to or arising out of the products, including, but not limited to, any cause of action sounding in contract, tort, or strict liability, shall not exceed the total amount of the purchase price paid for those products which are the subject of any such claim. This limitation of liability is intended to apply without regard to whether other provisions of this agreement have been breached or have proven ineffective even if the Company has been advised of the possibility of such claims or demands. In no event shall the Company be liable to the Purchaser or any other person for any loss of profits or any incidental, special, exemplary, or consequential damages for any claims or demands brought by the Purchaser or such other persons.

INDEMNITY The Company's maximum liability to Purchaser and to any end user is as set forth above. The Company makes no warranty to anyone for any products not manufactured by the Company and shall have no liability for any use or installation of any products (whether manufactured by the Company or other manufacturers) not specifically authorized by this sale. Purchaser acknowledges various warnings by the Company regarding the products and its installation and use. If the Company incurs any claims, lawsuits, settlements, or expenses (including attorney fees) for any loss, injury, death or property damage including, but not limited to, claims arising out of the Purchaser's or any end user's installation or use of the products, the Purchaser shall indemnify and hold the Company harmless.

ACME ENGINEERING & MANUFACTURING CORPORATION
P.O. Box 978
Muskogee, OK 74402
Telephone 918-682-7791
Fax 918-682-0134
AcmeFan.com

384 Gallatin Park Dr. Suite 201, Bozeman, MT 59715
(O) 406.585.7333 (F) 406.585.7666

On Broadway

Make Up Air Unit

Make Up Air Unit – Captive Aire

TAG: MAU-1 – Captive Aire Model A1-D.250-G10

TAG: MAU-1

Standard and Modular Direct Fired Heaters

Installation, Operation, and Maintenance Manual

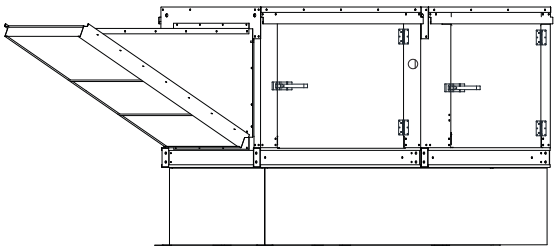

Modular Direct Fired Heater

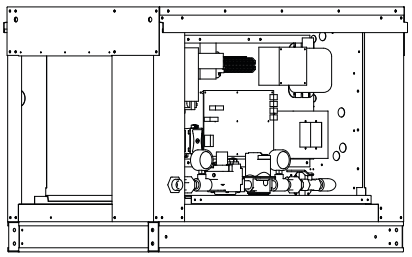

Direct Fired Heater

FOR YOUR SAFETY

IF YOU SMELL GAS: OPEN WINDOWS, DO NOT TOUCH ELECTRICAL SWITCHES, EXTINGUISH ANY OPEN FLAMES, IMMEDIATELY CALL YOUR GAS SUPPLIER.

RECEIVING AND INSPECTION

Upon receiving unit, check for any interior and exterior damage. If damage is found, report it immediately to the carrier. Check that all accessory items are accounted for and free of damage.

WARNING!!

Improper installation, adjustment, alteration, service, or maintenance can cause property damage, injury, or death. Read the installation, operating, and maintenance instructions thoroughly before installing or servicing this equipment. ALWAYS disconnect power and gas before working on heater.

Save these instructions. This document is the property of the owner of this equipment and is required for future maintenance. Leave this document with the owner when installation or service is complete.

Table of Contents

WARRANTY 3
- Listings 3
- Patents 3

INSTALLATION 4
- Mechanical 4
- Curb and Ductwork 6
  - Roof Mount Installation 8
  - Installation with Exhaust Fan 8
  - Duct Mount Installation 9
  - Indoor (Inline) Installation 9
  - Heat Module Add-On Installation 10
- Gas 11

ELECTRICAL 13
- Fan to Building Wiring Connection 14
  - Motorized Intake Damper 15
- Permanent Split Capacitor (PSC) Motor Speed Control 15
  - EVO™/ECM-VCU 15
- Electronically Commutated Motor (ECM) Speed Control 16
  - External PWM Signal 16
- Unit Mount Controller 16
- Motor Speed Controller (MSC) Installation 17
- MSC Controls Overview 18
  - MSC Menu 18
  - Input Threshold 20
  - MSC Menu Tree 21
- Variable Frequency Drive (VFD) 22
  - Variable Frequency Drive (VFD) Installation 23
  - Input AC Power 23
  - VFD Output Power 23
  - VFD Programming 24
  - ACTECH SMV VFD 25
- Remote Control Panel 26

OPERATION 27
- Start-up Procedure 27
- Pulley Adjustment 28
- Pulley Alignment/Proper Belt Tension 29
- Pulley Combination Chart 30
- Pilot Adjustment 31
- Main Burner Adjustment 32
- Heater Start-up Summary 33
- Final Start-up Procedure 33
- Sequence of Operation 34
  - Flame Safety Control 34
- Modulating Gas System 36
- High Temperature Limit 36
- Optional Remote Panel Circuit 38
  - Static Pressure Control (Photohelic) 39
  - Static Pressure Controller Installation Instructions 40
  - A-306 Outdoor Sensor 40
  - Remote Panel Option 41
- Components 42
- Troubleshooting 43
  - Remote Panel Troubleshooting Chart 44
  - Burner Troubleshooting 45
  - MSC Troubleshooting 46
  - Troubleshooting Flowcharts 47

MAINTENANCE 48
- General Maintenance 48
- 2 Weeks After Start-up 48
- Every 3 Months 48
- Yearly 48
  - Burner Maintenance 49
  - Re-Setting of the Unit 50
  - Emergency Shutdown of Unit 50
  - Prolonged Shutdown of the Unit 50
- Unit Filters 50
- Start-Up and Maintenance Documentation 52

WARRANTY

This equipment is warranted to be free from defects in materials and workmanship, under normal use and service, for a period of 2-years from date of shipment. This warranty shall not apply if:

1. The equipment is not installed by a qualified installer per the MANUFACTURER'S installation instructions shipped with the product.
2. The equipment is not installed in accordance with Federal, State, or Local codes and regulations.
3. The equipment is misused or neglected, or not maintained per the MANUFACTURER'S maintenance instructions.
4. The equipment is not installed and operated within the limitations set forth in this manual.
5. The invoice is not paid within the terms of the sales agreement.

The MANUFACTURER shall not be liable for incidental and consequential losses and damages potentially attributable to malfunctioning equipment. Should any part of the equipment prove to be defective in material or workmanship within the 2-year warranty period, upon examination by the MANUFACTURER, such part will be repaired or replaced by MANUFACTURER at no charge. The BUYER shall pay all labor costs incurred in connection with such repair or replacement. Equipment shall not be returned without MANUFACTURER'S prior authorization, and all returned equipment shall be shipped by the BUYER, freight prepaid to a destination determined by the MANUFACTURER.

Listings

This unit is ETL-listed to standard American National Standard/CSA Standard for Gas Unit Heaters And Gas-Fired Duct Furnaces ANSI Z83.4, CSA 3.7.

Patents

The Direct Gas Fired Make-Up Air Profile Plates is covered under the following patent: Heated Make-Up Air System: United States Patent No. 6629523 B2.

INSTALLATION

It is imperative that this unit is installed and operated with the designed airflow and electrical supply in accordance with this manual. If there are any questions about any items, please call the service department at **1-866-784-6900** for warranty and technical support issues.

Mechanical

WARNING: DO NOT RAISE UNIT BY THE INTAKE HOOD, BLOWER, MOTOR SHAFT, OR BEARINGS. USE ALL LIFTING LUGS PROVIDED WITH A SPREADER BAR OR SLING UNDER THE UNIT.

Clearances

The top, back, and front surfaces of this heater may not be installed less than 6" from combustible materials. The heater base may be installed on combustible surfaces. Allow 24" minimum service clearance on both sides of this heater.

Site Preparation

1. Provide clearance around installation site to safely rig and lift equipment into its final position (**Figure 1**). Supports must adequately support equipment. Refer to manufacturer's estimated weights.
2. Locate unit close to the space it will serve to reduce long, twisted duct runs.
3. Consider general service and installation space when locating unit.
4. Do not allow air intake to face prevailing winds. Support unit above ground or at roof level high enough to prevent precipitation from being drawn into its inlet. The inlet must also be located at least 10 feet away from any exhaust vents. The fan inlet shall be located in accordance with the applicable building code provisions for ventilation air.
5. All air to the heater must be ducted from the outdoors. Recirculation of room air is not permitted. If in doubt regarding the application, consult the manufacturer.

Figure 1 - Spreader Bar

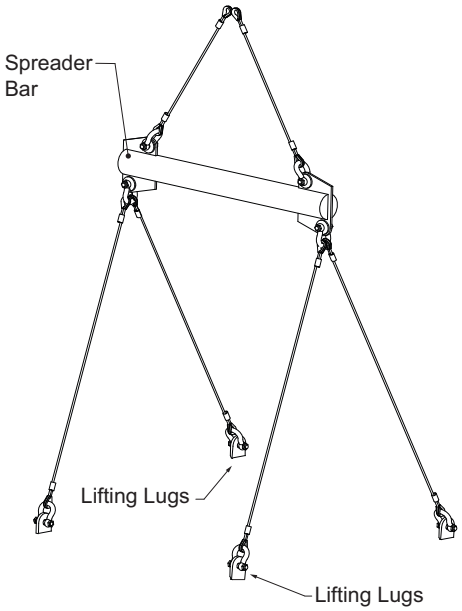

Intake and Curb Assembly

Intakes and curbs (**Figure 2**) are shipped on a separate skid. Upon unit arrival, perform the following steps to assemble the intake to the unit.

1. Apply silicone or weather-proof gasket on the backside of the flanges of the intake hood or V-bank intake.
2. Secure the flanges of the intake hood to the unit with the supplied sheet metal screws.
3. Use caulk on the outside of the screws to prevent water leaks.
4. If the unit is a modular unit with a V-bank or evaporative cooler section, the V-bank or evaporative cooler will bolt to the heater with the bolts provided.
5. Slide the filters down the filter track.

Figure 2 - Intake and Curb Assembly

1. Unit
2. Intake Housing
3. Intake Filter(s)
4. Curb

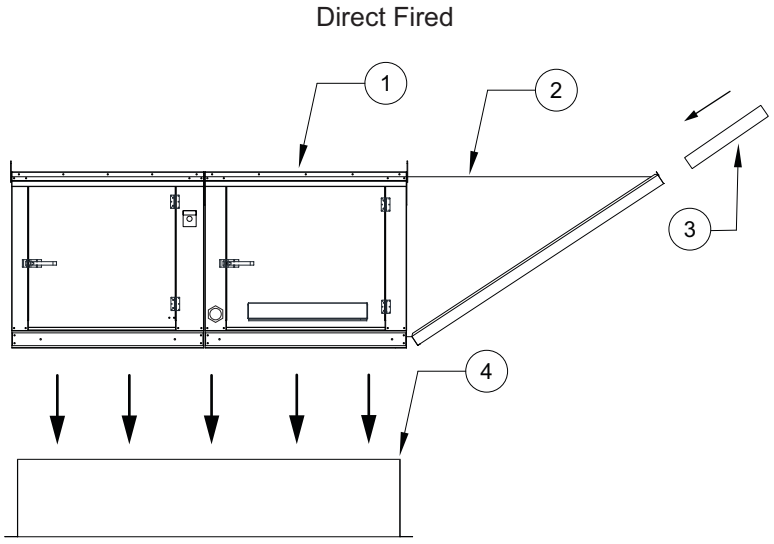

Curb and Ductwork

This fan was specified for a specific CFM and static pressure. The ductwork attached to this unit will significantly affect airflow performance. When using rectangular ductwork, elbows must be radius throat, radius back with turning vanes. Flexible ductwork and square throat/square back elbows should not be used. Any transitions and/or turns in the ductwork near the fan outlet will cause system effect. System effect will drastically increase the static pressure and reduce airflow.

- **Table 1 on page 7** shows the minimum fan outlet duct sizes and straight lengths required for optimal fan performance.
- Do not use the unit to support ductwork in any way. This may cause damage to the unit.
- **Follow SMACNA standards and manufacturer's requirements for the duct runs.** Fans designed for rooftop installation should be installed on a prefabricated or factory-built roof curb.
- Follow curb manufacturer’s instructions for proper curb installation.
- The unit should be installed on a curb and/or rail that meets local code height requirements.
- Make sure the duct connection and fan outlet are properly aligned and sealed.
- Secure fan to curb through vertical portion of the ventilator base assembly flange. Use a minimum of eight (8) lug screws, anchor bolts, or other suitable fasteners (not furnished). Shims may be required depending upon curb installation and roofing material.
- Verify all fasteners are secure. **Figure 3** through **Figure 6** show different mechanical installations.
- Adequate building relief shall be provided so as not to over pressurize the building when the heating system is operating at its rated capacity. This can be accomplished by taking into account, through standard engineering methods, the structure’s designed infiltration rate; by providing properly-sized relief openings; or by interlocking a powered exhaust system; or by a combination of these methods.
- Heaters installed with intake ductwork must be purged to replace at least four air changes of the volume of the intake duct.
- If the failure or malfunction of this heater creates a hazard to other fuel-burning equipment in the building (e.g., when the heater is providing makeup air to a boiler room), the unit is to be interlocked to open inlet air dampers or other such devices.
- Flexible connectors should be employed on all ductwork connections. Vibration isolators are optional and can be supplied in the loose parts package.
- Units that are installed in airplane hangars should be installed in accordance with the Standard for Aircraft Hangars, ANSI/NFPA 409. Units that are to be installed in public garages should be installed in accordance with the Standard for Parking Structures, ANSI/NFPA 88A, or the Standard for Repair Garages, ANSI/NFPA 88B, and with CAN/CGA B149 Installation Codes.

Table 1 - Required Supply Ductwork

Blower Size (Inches)	Discharge	Duct Size	Straight Duct Length
10	Side	14” x 14”	48”
	Down		
15D, 16Z, 18Z	Side	20” x 20”	72”
	Down	14” x 14”	48”
12	Side	16” x 16”	54”
	Down		
15	Side	20” x 20”	72”
	Down		
20D, 20Z, 22Z	Side	26” x 26”	108”
	Down	20” x 20”	72”
18	Side	24” x 24”	86”
	Down		
24D, 25Z	Side	30” x 30”	108”
	Down	24” x 24”	86”
20	Side	26” x 26”	108”
	Down		
30D, 28Z	Side	32” x 32”	168”
	Down	26” x 26”	108”
25	Side	32” x 32”	168”
	Down		
36D	Side	36” x 36”	189”
	Down	32” x 32”	168”

WARNING!!

Failure to properly size ductwork may cause system effects and reduce the performance of the equipment.

Roof Mount Installation

Note: Refer to submittal drawings for specific unit dimensions.

Figure 3 - Roof Mount Details

1. Discharge Opening
2. Curb Outer Wall
3. Flex Conduit Located in Curb Area for Field Wiring
4. Intake Housing
5. Lifting Lugs
6. Direct Fired Module
7. Service Disconnect Switch
8. Blower/Motor Access Door
9. Curb (20” High)
10. Control Drop
11. Motor Drop
12. Gas Connection

Max. Roof Opening 2” Smaller than Curb Outside Dimension.

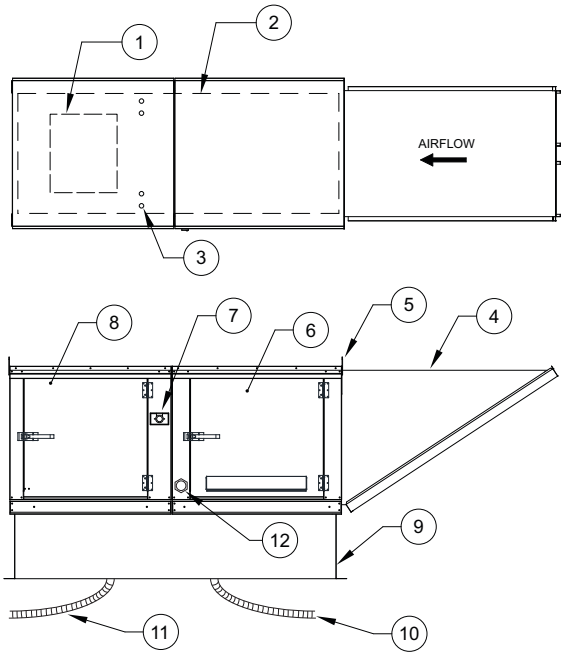

Installation with Exhaust Fan

Note: Refer to submittal drawings for specific unit dimensions.

Figure 4 - Exhaust Fan Details

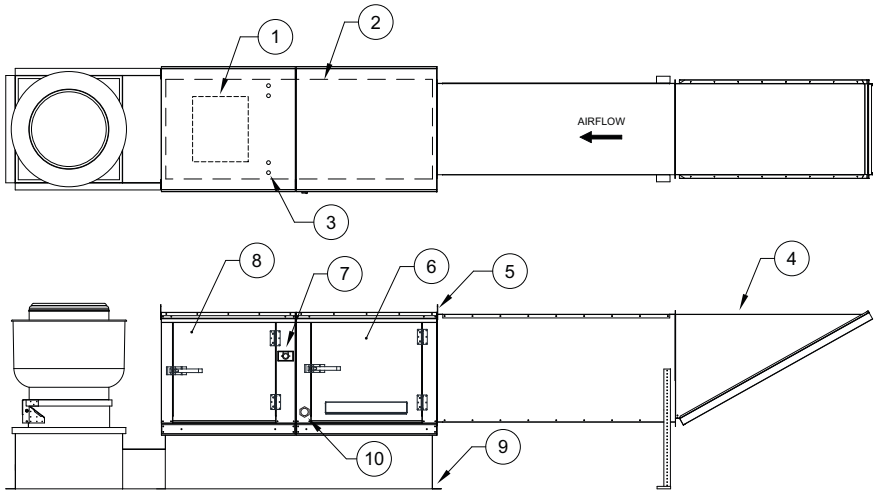

1. Discharge Opening
2. Curb Outer Wall
3. Flex Conduit Located in Curb Area for Field Wiring
4. Intake Housing
5. Lifting Lugs
6. Direct Fired Module
7. Service Disconnect Switch
8. Blower/Motor Access Door
9. Curb with Support Legs or Rail (20” High)
10. Gas Connection

Max. Roof Opening 2” Smaller than Curb Outside Dimension.

Duct Mount Installation

Note: Refer to submittal drawings for specific unit dimensions.

Figure 5 - Duct Mount Details

1. Control/Valve Access Door
2. Gas Connection
3. Optional Unistrut Base
4. Lifting Lugs

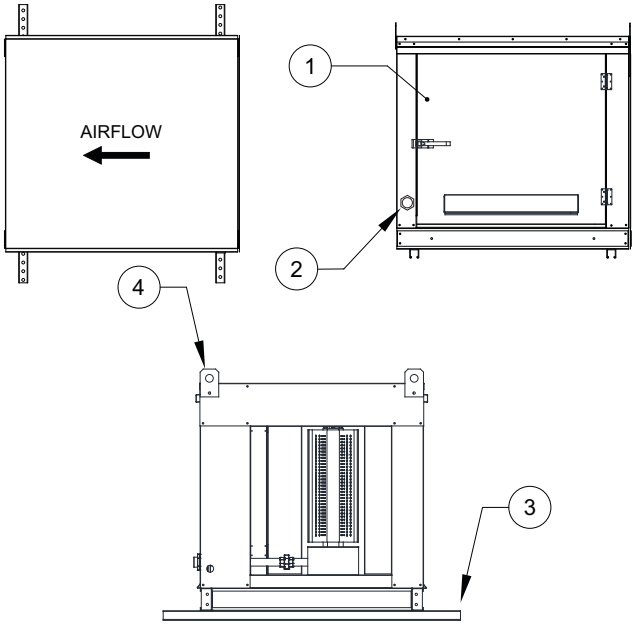

Indoor (Inline) Installation

Note: Refer to submittal drawings for specific unit dimensions.

Figure 6 - Indoor Installation Details

1. Flex Conduit for Field Wiring
2. Optional Unistrut Base
3. Lifting Lugs
4. Control/Filter Access Door
5. Control/Valve Access Door
6. Gas Connection
7. Blower/Motor Access Door
8. Service Disconnect Switch

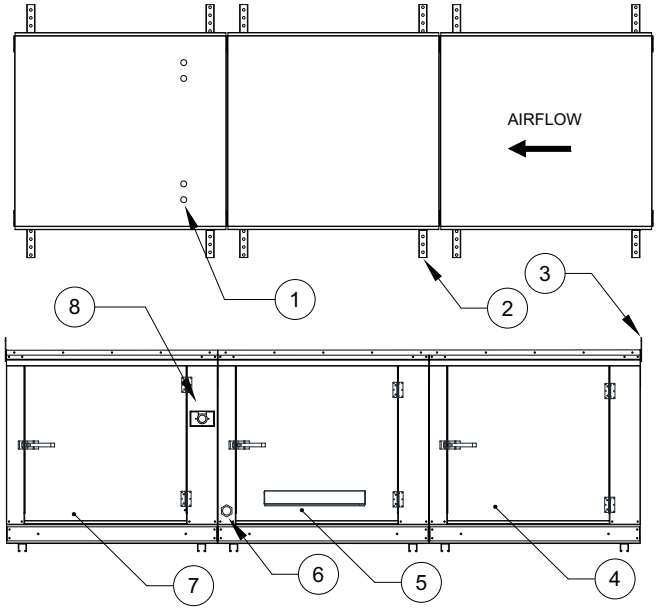

Heat Module Add-On Installation

Modular heat units (**Figure 7**) that are ordered to provide heat onto an existing blower only application require field mechanical and wiring installation.

1. Remove existing intake housing and lifting lugs from the blower section intake side.
2. Attach heat module to blower intake using the provided sheet metal screws and bolts. Tighten screws and bolts to compress the gasket between the heat module and the blower module.
3. Support and level the end of the heat module (end opposite the blower) with the provided equipment legs/rails.
4. Attach the intake housing to the intake side of the heater module.
5. Drill a hole in the discharge of the blower large enough to insert the discharge control sensor (if provided). Install the sensor through the hole.
6. Wire the sensor and coil as indicated on the supplied wiring schematic. Route all wiring through metal conduit.
7. After the add-on installation is complete, refer to **"Start-up Procedure" on page 27**.

Figure 7 - Heat Module

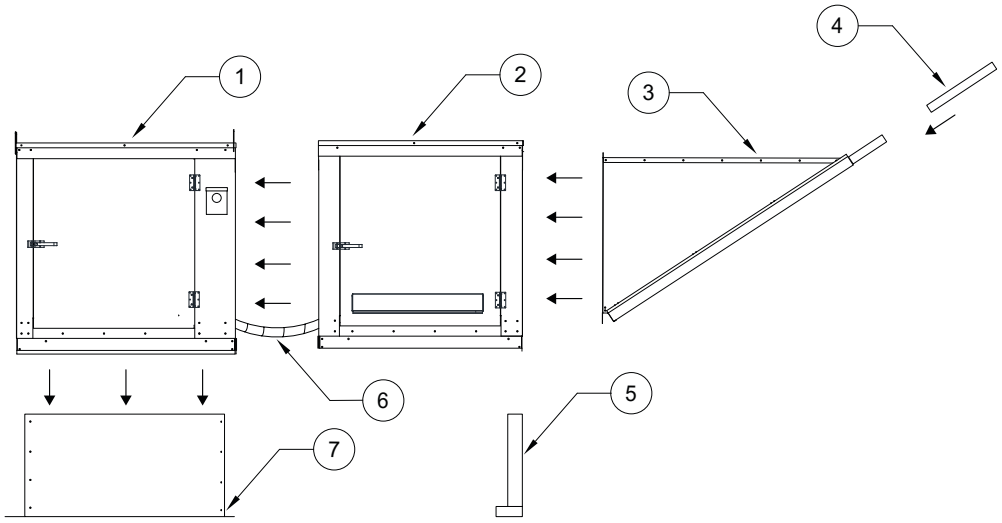

1. Blower
2. Direct Fired Module
3. Intake Housing
4. Filters
5. Equipment Legs
6. Conduit
7. Curb

Gas

Installation of gas piping must conform with local building codes, or in the absence of local codes to the National Fuel Gas Code, ANSI Z223.1 (NFPA 54) – latest edition. In Canada, installation must be in accordance with CAN/CGA-B149.1 for natural gas units and CAN/CGA-B149.2 for propane units.

WARNING: INLET GAS PRESSURE MUST NOT EXCEED PRESSURE INDICATED ON NAMEPLATE. SEE UNIT NAMEPLATE FOR PROPER GAS SUPPLY PRESSURE AND GAS TYPE.

1. Always **disconnect power** before working on or near a heater. Lock and tag the disconnect switch or breaker to prevent accidental power-up.
2. Piping to the unit should conform to local and national requirements for type and volume of gas handled, and pressure drop allowed in the line. Refer to the Gas Engineer's Handbook for gas line capacities.
3. The incoming pipe near the heater should be sized to match the connection on the outside of the unit. Unit inlet sizes are shown in **Table 2**. The unit requires a steady supply of gas at all times, avoid multiple taps in the gas supply line.
4. Install a ground joint union with brass seat and a manual shut-off valve external to the unit casing. Install shut-off valve adjacent to the unit for emergency shut-off and easy servicing of controls. Refer to **Figure 8**.
5. Provide a sediment trap, as shown in **Figure 8**, before each unit and where low spots in the pipeline cannot be avoided.
6. Clean out the gas line to remove debris before making connections. Purge gas line to remove air before attempting to start unit. Purging air from gas lines should be performed as described in ANSI Z223.1-latest edition "National Fuel Gas Code," or in Canada as described in CAN/CGA-B149.
7. All field gas piping must be pressure/leak tested before unit operation. Use a non-corrosive bubble forming solution or equivalent for leak testing. The heater and its individual shut-off valve must be disconnected from the gas supply piping system during any pressure testing of that system at test pressures in excess of 1/2 psi.
8. This unit requires the gas pressure to be within the unit's minimum and maximum gas pressure ratings. If the pressure is greater than the maximum, the internal valve components will be damaged. If the pressure is below the minimum, the heater will not perform to specifications. Refer to **Table 3** for gas pressure ratings.

Table 2 - Gas Connection Sizes

Unit Size	Gas Pipe Size (NPT)
Size 1	3/4"
Size 2	1"
Size 3	1"
Size 4	1-1/4"
Size 5	1-1/2"

Figure 8 - Gas Connection Diagram

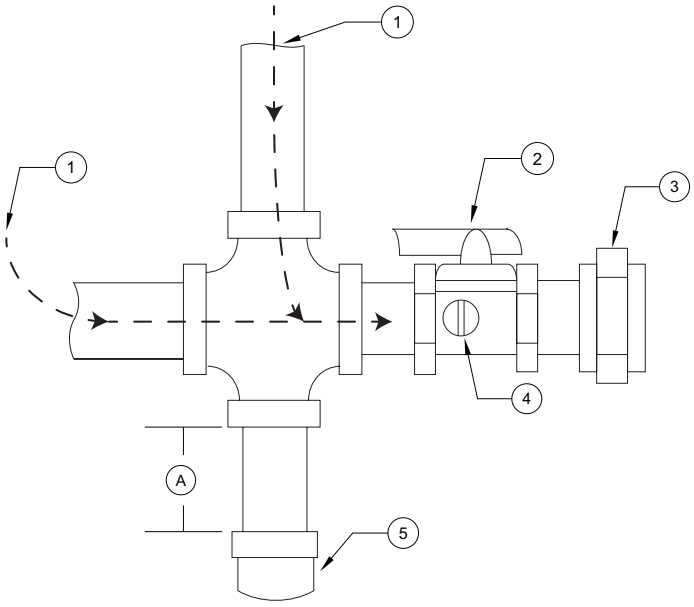

1. Gas Supply Line Connection
2. Manual Gas Shut-off Valve
3. Ground Joint Union with Brass Seat
4. Plugged 1/8” NPT Test Gauge Connection
5. Sediment Trap

A. Minimum Depth = 3”

Table 3 - Gas Pressure

Gas Pressure Type	Gas Pressure
Size 1-3 Inlet	7 -14 Inches WC
Size 4-5 Inlet	7 Inches WC - 5 psi
Maximum Manifold Pressure - Natural Gas	5 Inches WC Maximum
Maximum Manifold Pressure - Propane	2.5 Inches WC Maximum

NOTICE

Refer to the heater’s rating plate for determining gas supply pressures and requirements.

ELECTRICAL

WARNING!!

Disconnect power before installing or servicing unit. High voltage electrical input is needed for this equipment. A qualified electrician should perform this work.

Before connecting power to the heater, read and understand the entire section of this document. As-built wiring diagrams are furnished with each unit by the factory and are attached to the control module's door or provided with paperwork packet.

Electrical wiring (**Table 4**) and connections must be made in accordance with local ordinances and the National Electric Code, ANSI/NFPA 70. Verify the voltage and phase of the power supply, and the wire amperage capacity is in accordance with the unit nameplate. For additional safety information, refer to AMCA publication 410-96, *Recommended Safety Practices for Users and Installers of Industrial and Commercial Fans.*

1. **Always disconnect power before working on or near this equipment. Lock and tag the disconnect switch and/or breaker to prevent accidental power-up**.
2. An electrical drop containing the line voltage power wiring is shipped with every unit. The electrical drop should be brought through one of the conduit openings located in the base of the unit, run through the curb, and connected to a junction box inside the building.
3. A dedicated branch circuit should supply the motor circuit with short circuit protection according to the National Electric Code. This dedicated branch should be run to the junction box.
4. Verify that the power source is compatible with the requirements of your equipment. The nameplate identifies the **proper phase and voltage** of the equipment.
5. Units shipped with optional remote panels require a second drop through the base of the unit. It is important to route the motor wires in a separate conduit from the wiring. Refer to **Figure 3**.
6. Before connecting the unit to the building's power source, verify that the power source wiring is de-energized.
7. Secure the power cable to prevent contact with sharp objects.
8. Do not kink power cable and never allow the cable to encounter oil, grease, hot surfaces, or chemicals.
9. Before powering up the unit, make sure that the fan rotates freely. Make sure that the interior of the unit is free of loose debris or shipping materials.
10. If any of the original wire supplied with the unit must be replaced, it must be replaced with type THHN wire or equivalent.

Table 4 - Copper Wire Ampacity

Wire Size AWG	Maximum Amps
14	15
12	20
10	30
8	50
6	65
4	85
3	100
2	115
1	130

Fan to Building Wiring Connection

Figure 9 - Wiring Connection Details

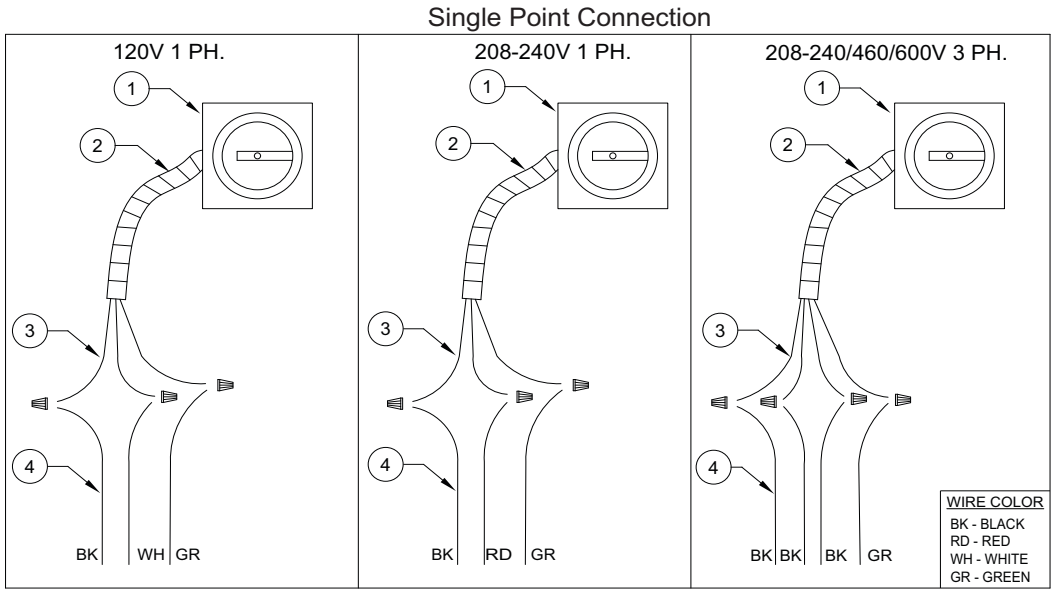

1. Disconnect Switch
2. Galflex Conduit (In Unit)
3. Factory Wiring
4. Field Supplied Wiring - From building power or pre-wired control panel.

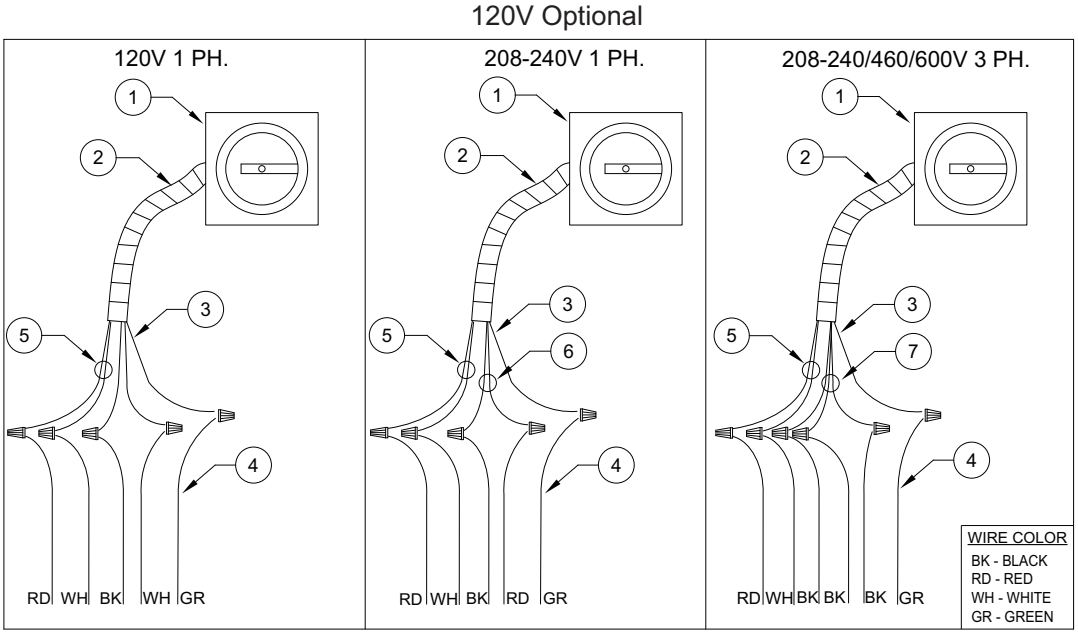

1. Disconnect Switch
2. Galflex Conduit (In Unit)
3. Factory Wiring
4. Field Supplied Wiring - From building power or pre-wired control panel.
5. 120V Single Phase Standing Power
6. 208-240 Single Phase
7. Three Phase

Motorized Intake Damper

On units shipped with the optional motorized intake damper, a power transformer is supplied with the unit if the main incoming voltage is greater than 120V. The damper motor is automatically energized when the main disconnect switch is in the ON position. No external wiring to the damper motor is required.

Permanent Split Capacitor (PSC) Motor Speed Control

Figure 10 - PSC Motor Speed Control

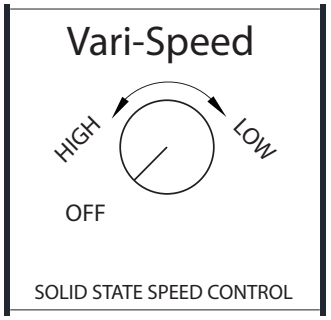

Some single-phase direct-drive fans contain speed controls that regulate the amount of voltage going to the motor. Specific PSC motors must be used in conjunction with speed controls. The speed control has a knob (**Figure 10**) with an off position along with high to low range. At high speed, the speed control allows all of the line voltage to pass directly to the motor.

A minimum speed adjustment is provided to allow independent control of the minimum speed setting. Minimum speed adjustment ensures the motor runs with sufficient torque to prevent stalling. To adjust this:

1. Motor must be in actual operating conditions to achieve proper speed adjustment. Motor will not slow down unless proper load is applied.
2. Turn main control knob to lowest speed position.
3. Locate and adjust minimum speed setting. This can be found under the speed control faceplate. Use a small screwdriver to adjust. Rotate clockwise to decrease minimum speed; counter-clockwise to increase minimum speed.
4. Motor will now operate from this preset minimum speed to full speed.

The lowest minimum voltage that may be applied to these motors is 65V AC. Running lower voltages to the motor can cause premature failure and overheating problems.

EVO™/ECM-VCU

The Visual Control Unit (VCU) used with EC motors features a 4 digit LED numerical display. The blue knob on the control allows the user to set the flow index with a screwdriver. Twenty seconds later, the display shows the motor RPM. Then, the display periodically alternates between the flow index and motor RPM. The flow index has a range of 0 to 100% and is typically linear with motor RPM.

The ECM control requires a 24V AC input and can locally turn the motor on and off. The motor can be adjusted between 300 RPM and maximum speed with this control.

Note: A Variable Frequency Drive (VFD) is required to adjust the speed control of a non-electrically commutated 3 phase direct drive motor.

Figure 11 - EVO™/ECM-VCU Controller

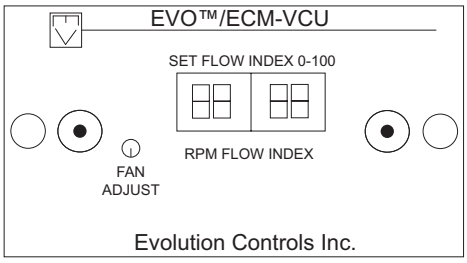

Electronically Commutated Motor (ECM) Speed Control

An Electrically Commutated Motor (ECM) with speed control allows for an accurate manual adjustment of the fan's speed. The benefits of using an EC motor is exceptional efficiency, performance, and motor life.

External PWM Signal

The fan unit will be shipped with power wiring and communication wiring fed to an internal junction box. The fan is shipped with Shielded Twisted Pair (STP) wire which is used to wire to a remote PWM signal. Red wire is used to go to the positive PWM signal, black wire is used to go to the negative PWM signal. Reference schematics for all wiring connections. STP is connected to the communication wiring of the motor using wire nuts in the junction box. If a preset length of STP is provided, it will be connected to the junction box from the factory. Run the STP through any available knockout in the fan base.

Unit Mount Controller

The RTC speed controller features a 4 digit LED display with a five button interface. All parameters can be accessed through the user menu. The percent of run speed can be changed by using the **Up** and **Down** buttons followed by pressing **Enter** (middle button) to save changes. Every **ten seconds** the display will toggle between current percentage of run speed and current RPMs. The flow index has a range of **0-100%** and is typically linear with motor RPM.

If the remote function (re) is enabled, the speed is controlled through a **0-10V** input. **0V = 0%** and **10V = 100%**, unless overridden by the low speed and high speed limits.

The speed controller requires a **24V AC** input and can locally turn the motor on and off. The motor RPM range is fully adjustable between the minimum and maximum setpoints, see LSPD and HSPD on the programming display. For more information, see the RTC control operating manual.

For all motors except 16Z, 18Z, 20Z, 22Z, 25Z, 28Z: If "oFF" is being displayed, and the speed is set above 300 RPM, the ECM is not receiving RPM feedback. Check that the ECM is wired correctly. Check that the motor "tyP" in the settings matches the motor manufacturer. 16Z, 18Z, 20Z, 22Z, 25Z, 28Z do not send RPM feedback.

NOTE: A Variable Frequency Drive (VFD) is required to adjust the speed control of a non-electrically commutated 3-phase direct-drive motor.

Figure 12 - RTC Speed Controller and Menu

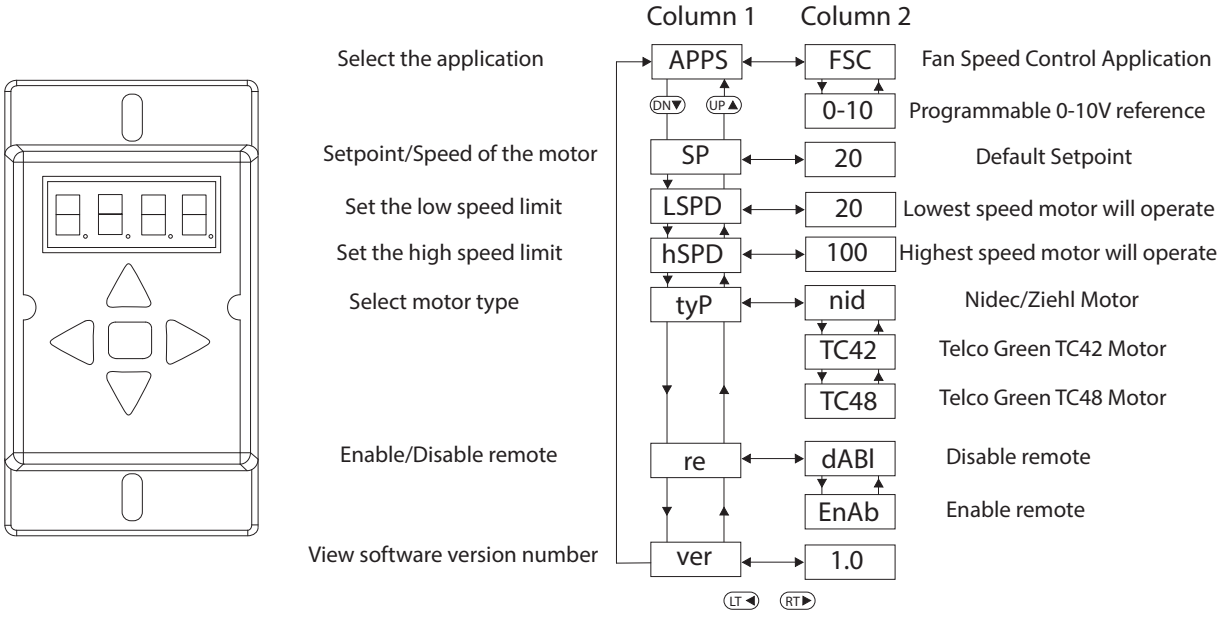

Motor Speed Controller (MSC) Installation

The Motor Speed Controller (MSC) is a versatile device able to output various signal types to many different Electrically Commutated Motors (ECMs). The MSC signal output types can be selected under the 'Motor Type' section of the MSC menu. The MSC may be installed in a fan, remotely in a kitchen space, or in a mechanical room. While this device can be mounted remotely and powered using 24V, it may also be mounted with the fan where it will be exposed to higher voltages. If installed in the fan, the electrical installation must be carried out according to the appropriate regulations (e.g., cable cross-sections, circuit breaker, protective earth [PE] connection). National and local codes must be followed during the installation process.

The MSC board may be powered through a 120VAC/24VAC CLASS 2 transformer, 120V AC/24V DC CLASS 2 power supply, or through MODBUS connections.

The MSC contains static sensitive components. Therefore, you must handle with care to avoid damage to these components. All operations concerning installation, commissioning, and maintenance must be carried out by qualified, skilled personnel who are familiar with the installation, assembly, commissioning, and operation of the electronic board and the application for which it is being used.

Ensure proper handling and avoid excessive mechanical stress. Do not bend any components when handling or installing component. **Do not touch any electronic components or contacts**.

Precautions must be adhered to during installation, testing, servicing, and repairing of this board. Component damage may result if proper procedures are not followed.

Do not install the MSC where it is subjected to adverse environmental conditions such as combustibles, oils, hazardous vapors, corrosive chemicals, excessive dust, moisture, direct sunlight, or extreme temperatures. When removing or installing the MSC to the j-box, verify the gasket is present. All electrical connections for the MSC are located on the backside of the controller. Refer to **Figure 13** for details on installation and electrical connections. When the micro USB programming port is not in use, place the weather-seal plug into the port location.

Figure 13 - Installation/Electrical Connections

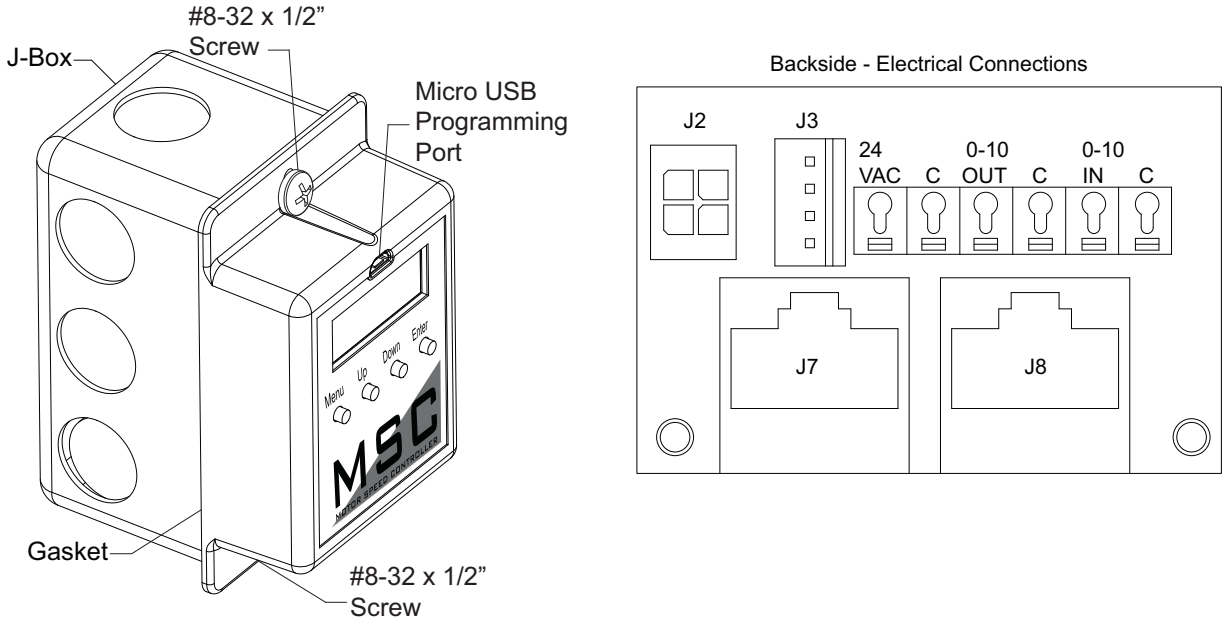

MSC Controls Overview

There are four buttons to navigate through the menu screens, refer to **Figure 14**.

Press the **MENU** button to access menu settings/parameters, pressing **MENU** will also back out of the current menu screen. To scroll through menus, use **UP** and **DOWN** buttons. Press the **ENTER** button to change setting/parameter selection.

To enter password, press MENU, then press **ENTER** when “Board Config” is displayed. Use **UP** and **DOWN** to scroll through numbers, press **ENTER** to advance to the next numerical setting. To save changes, press **MENU** until the screen displays “SAVE CHANGES? [ENTER] TO SAVE.” Press the ENTER button to save changes.

Figure 14 - MSC Front Detail View

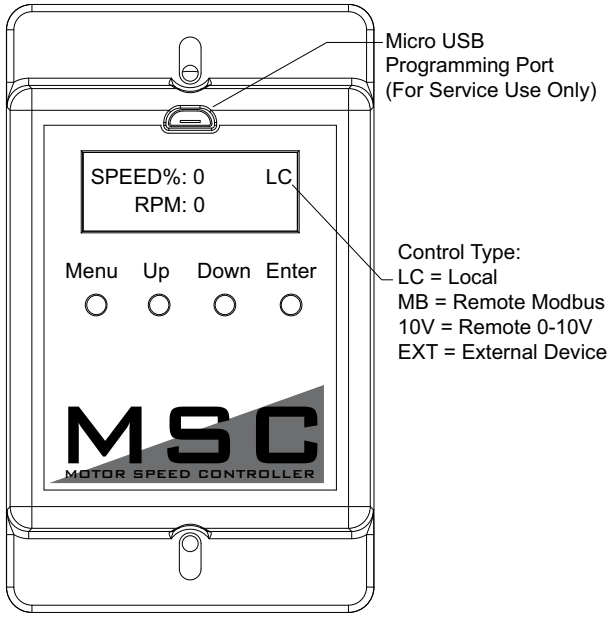

MSC Menu

Board Config - Password (default is 0225)

- **Motor Type** - User may change motor type between Nidec, Telco 42, Telco 48, Ziehl, 0-10V, Other.
- **Control Type** - This setting adjusts how the fan will be controlled.
  - **Local** - The fan will be controlled by the MSC.
  - **Remote Modbus** - The fan will be controlled by another master board through the MSC. A connection between the 0-10V Out to 0-10V In must be made for start command.
  - **Remote 0-10V** - The fan will be controlled by an external 0-10V signal.
- **Speed Settings** - Provides access to speed and voltage settings.
  - **Low Speed** - Adjustable speed from 20% up to high speed setting, or 0-10V. Setting cannot go above High Speed parameter.
  - **High Speed** - Adjustable speed from 100% down to low speed setting, or 10-0V. Setting cannot go below Low Speed parameter.
  - **Set Speed%** - Adjustable speed range is dependent on Low Speed and High Speed settings. This controls the output of the motor.
  - **Voltage Range** - Only available when Motor Type “OTHER” is selected. Default setting is 24V. 5V, and 10V are also available.

- **Modbus #** - Adjustable Modbus ID. Exhaust Fan range 11-18, Supply Fan range 21 or 22. **A VFD and MSC cannot use the same Modbus #**.
- **Options**
  - **Feedback Fault** - If set to ENABLED, the MSC will monitor RPM feedback. If the MSC does not receive data for 30 seconds or 70% of the expected RPM, this fault will be displayed. **Ziehl motors do not provide feedback.**
  - **2 Speed** - The 0-10V output cannot be used when the 2 Speed or Manual Speed options are On, or if the "Control Type" is set to Modbus. When the 0-10V OUT and 0-10V IN terminals are **not** jumped together, the fan will operate at low speed. When 0-10V OUT and 0-10V IN terminals are jumped together, the fan will operate at high speed.
  - **Analog Speed** - The user may enable/disable the option, and calibrate a potentiometer for proper operation that is connected between the 0-10V OUT and 0-10V IN terminals. When enabled, you must calibrate the potentiometer. Follow the MSC's on-screen instructions. The speed will be adjustable between 0V (low speed) to 10V (high speed).
  - **Input Threshold** - When control type is set to Remote 0-10V, an input threshold will be created for motor control. Refer to **Figure 15 on page 20** for threshold examples.
    - **Zero Operation** - The user may select how the motor will operate when the 0-10V input is at 0V. The options will be Off or Low Speed (default).
    - **Threshold** - Increasing the threshold value will allow for the device to hold its voltage/RPM output while the input is between the 0 - threshold value.
- **Restore Settings** - Provides access to restore factory settings, and test & balance settings.
  - **Factory Settings** - This will reset all values back to factory settings.
  - **T & B Settings** - This will reset all values back to last saved test & balance settings.
- **Change Password** - Users may update the password setting to their own. Password 0225 will also be stored for backup. Both passwords will allow users to enter "Board Config" settings.

Software Version - Displays the current software version installed on the board.

Faults - This provides access to "Fault History," "Fault Totals," and "Clear Faults."

- **Fault History** - Displays fault history and board reboots in chronological order. Possible displayed faults are:
  - **No Faults** - There are no active faults with the system.
  - **Feedback Fault** - Only displayed for motors with feedback capabilities.
  - **Reboot** - Any time the fan goes from OFF to ON, this "fault" will be logged. This fault will only display in "Fault History."
  - **Modbus** - Issue with Modbus communication between the MSC and master board.
  - **Variable Device Fault** - When "Analog Speed" is selected and a potentiometer is connected, if the voltage drops below 1V, this fault will be displayed.
- **Fault Totals** - Displays amount of faults for Modbus, Feedback, Var Device, Reboot, and Total Faults.
- **Clear Faults** - Users may clear all faults from the board.

Service - This provides access to service settings. Password: 1234

- **Save T & B** - After the test & balance process has been completed, save adjustments under this menu.
- **IO Status** - Provides access to information about the inputs and outputs of the MSC board.
  - **V In** - Displays the incoming voltage (0-10V) to the MSC.
  - **V Out** - Displays the output voltage (0-10V) to the motor.
  - **RPM** - Displays motor RPM feedback. **Ziehl motors do not provide feedback.**
  - **PWM V** - Displays equivalent voltage reading of the PWM output to the motor.
  - **Speed%** - Displays PWM percentage output value to the motor.

Input Threshold

Figure 15 - Input Threshold Examples

Factory Default: Zero operation set to low speed, threshold set to 0V.

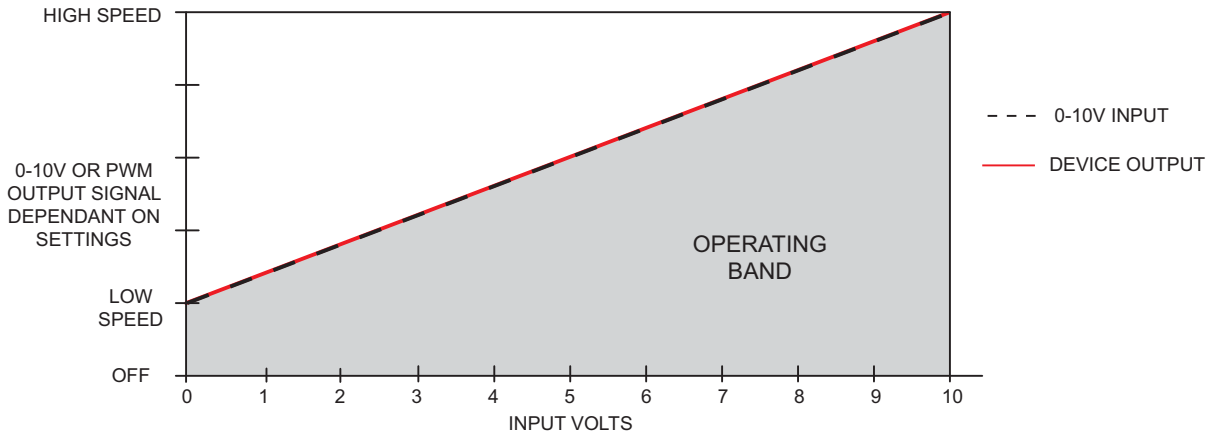

Zero operation set to low speed, threshold set to 2V.

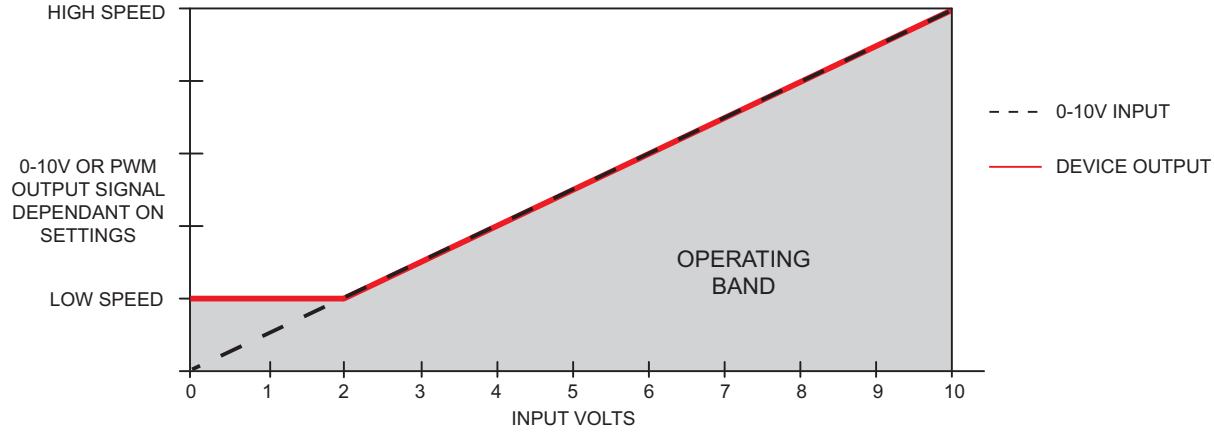

Zero operation set to off, threshold set to 2V.

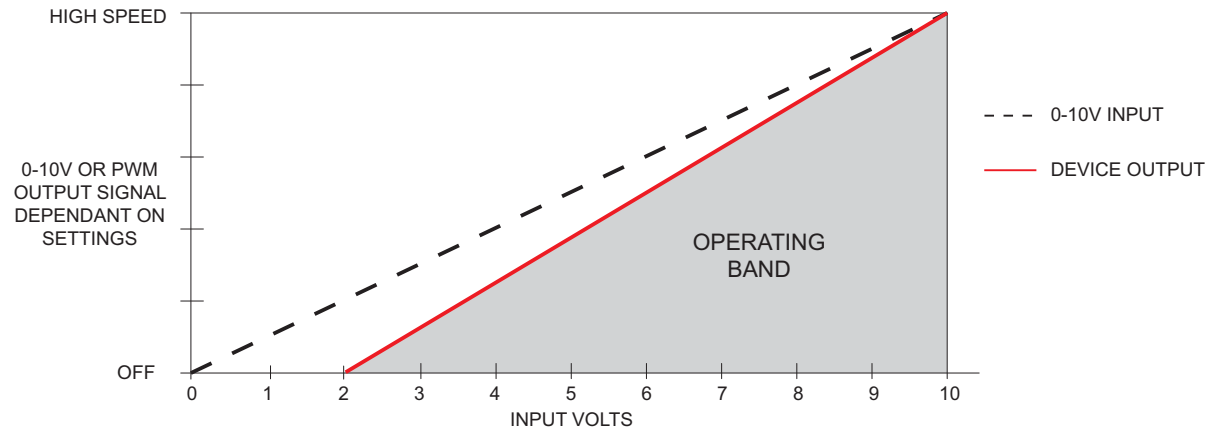

MSC Menu Tree

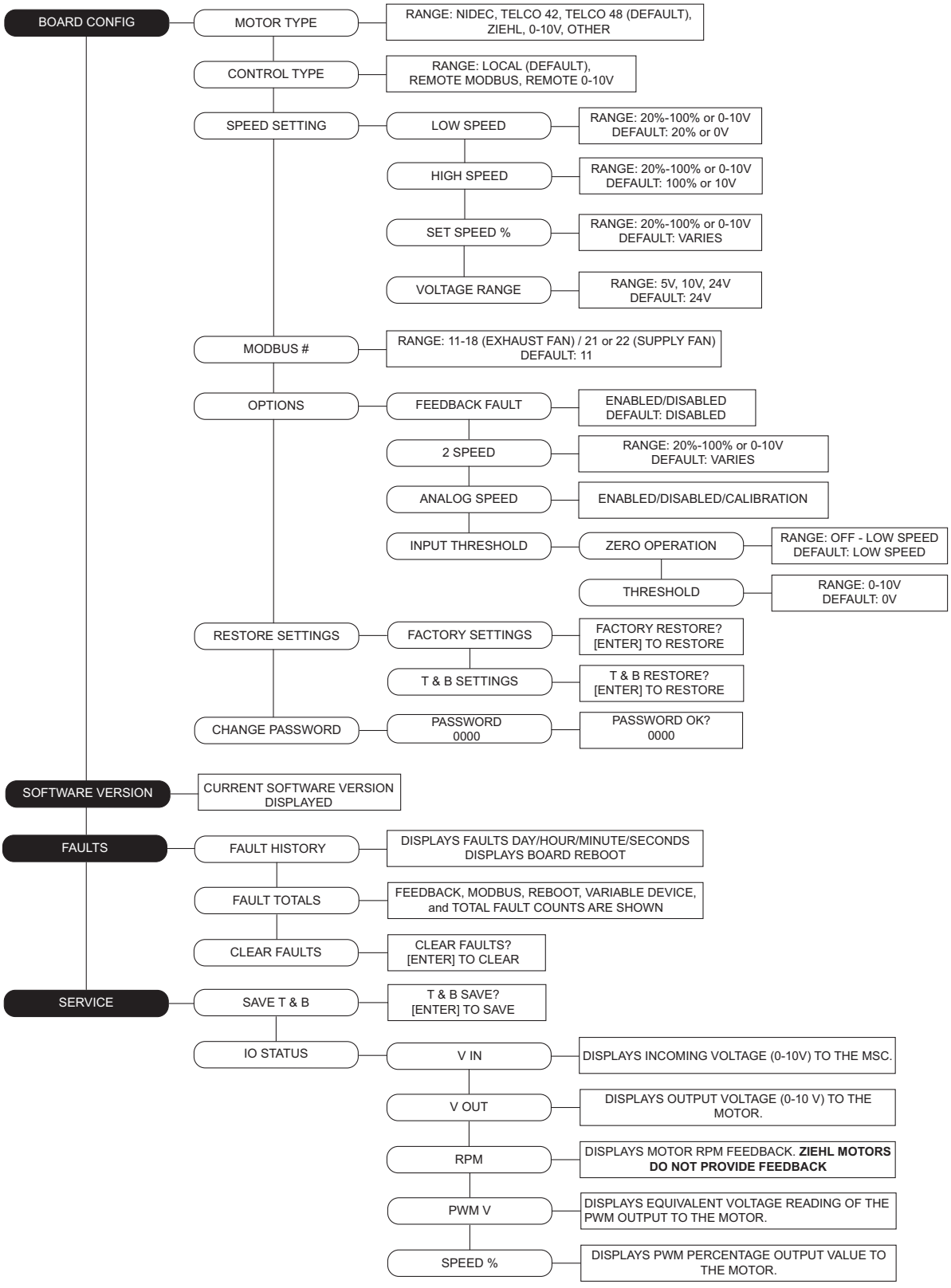

Variable Frequency Drive (VFD)

WARNING!!
- Before installing the VFD drive, ensure the input power supply to the drive is OFF.
- The power supply and motor wiring of the VFD must be completed by a qualified electrician.
- The VFD is factory programmed, only change if replaced or ordered separately.

Consult the VFD manual and all documentation shipped with the unit for proper installation and wiring of the VFD. The VFD has been programmed by the factory with ordered specific parameters. Use **Table 5** as a guide during installation.

Table 5 - VFD Installation Check List

Check Off	Description
	The installation environment conforms to the VFD manual.
	The drive is mounted securely.
	Space around the drive meets the drive's specification for cooling.
	The motor and driven equipment are ready to start.
	The drive is properly grounded.
	The input power voltage matches the drive's nominal input voltage.
	The input power connections at L1, L2, and L3 are connected and tight.
	The input power protection is installed.
	The motor power connection at U, V, and W are connected and tight.
	The input, motor, and control wiring are run in separate conduit runs.
	The control wiring is connected and tight.
	NO tools or foreign objects (such as drill shavings) are in the drive.
	NO alternative power source for the motor (such as a bypass connection) is connected - NO voltage is applied to the output of the drive.

Variable Frequency Drive (VFD) Installation

Input AC Power

- Circuit breakers feeding the VFDs are recommended to be thermal-magnetic and fast-acting. They should be sized based on the VFD amperage and according to **Table 6 on page 25**. Refer to the installation schematic for exact breaker sizing.
- Every VFD should receive power from its own breaker. If multiple VFDs are to be combined on the same breaker, each drive should have its own protection measure (fuses or miniature circuit breaker) downstream from the breaker.
- Input AC line wires should be routed in conduit from the breaker panel to the drives. AC input power to multiple VFDs can be run in a single conduit if needed. **Do not combine input and output power cables in the same conduit.**
- The VFD should be grounded on the terminal marked PE. A separate insulated ground wire must be provided to each VFD from the electrical panel. This will reduce the noise being radiated in other equipment.

ATTENTION: Do not connect incoming AC power to output terminals U, V, W. Severe damage to the drive will result. Input power must always be wired to the input L terminal connections (L1, L2, L3).

VFD Output Power

- Motor wires from each VFD to its respective motor MUST be routed in a **separate steel** conduit away from control wiring and incoming AC power wiring. This is to avoid noise and crosstalk between drives. An insulated ground must be run from each VFD to its respective motor. Do not run different fan output power cables in the same conduit.
- VFD mounted in ECP: A load reactor should be used and sized accordingly when the distance between the VFD and motor is greater than specified below. The load reactor should be installed within 10 feet of the VFD output:

  208/230V - Load reactor should be used when distance exceeds 250 feet.
  460/480V - Load reactor should be used when distance exceeds 50 feet.
  575/600V - Load reactor should be used when distance exceeds 25 feet.
- VFD mounted in fan: The load reactor should be sized accordingly when the VFD is mounted in the fan.

  208/230V - Load reactor is optional but recommended for 15 HP and above motors.
  460/480V - Load reactor is optional but recommended for 7.5 HP and above motors.
  575/600V - Load reactors are required for all HP motors.
- If the distance between the VFD and the motor is extremely long, up to 1000 FT, a dV/dT filter should be used, and the VFD should be increased by 1 HP or to the next size VFD. The dV/dT filter should be sized accordingly and installed within 10 feet of the output of the VFD.

  208/230V – dV/dT filter should be used when distance exceeds 400 feet.
  460/480V – dV/dT filter should be used when distance exceeds 250 feet.
  575/600V – dV/dT filter should be used when distance exceeds 150 feet.
- Do not install a contactor between the drive and the motor. Operating such a device while the drive is running can potentially cause damage to the power components of the drive.
- When a disconnect switch is installed between the drive and motor, the disconnect should only be operated when the drive is in a STOP state.

VFD Programming

Programming

1. The Drive should be programmed for the proper motor voltage. P107 is set to 0 (Low) if motor voltage is 120V AC, 208V AC or 400V AC. P107 is set to 1 (High) if the motor voltage is 230V AC, 480V AC, or 575V AC.
2. The Drive should be programmed for the proper motor overload value. P108 is calculated as Motor FLA x 100 / Drive Output Rating (available in **Table 6 on page 25**).

To enter the PROGRAM mode to access the parameters:

1. Use the buttons on the VFD screen (**Figure 16**) to adjust VFD settings. Press the Mode (M) button. This will activate the password prompt (PASS).
2. Use the Up and Down buttons to scroll to the password value (the factory default password is “0225”) and press the Mode (M) button. Once the correct password is entered, the display will read “P100”, which indicates that the PROGRAM mode has been accessed at the beginning of the parameter menu.
3. Use the Up and Down buttons to scroll to the desired parameter number.
4. Once the desired parameter is found, press the Mode (M) button to display the present parameter setting. The parameter value will begin blinking, indicating that the present parameter setting is being displayed. The value of the parameter can be changed by using the Up and Down buttons.
5. Pressing the Mode (M) button will store the new setting and exit the PROGRAM mode. To change another parameter, press the Mode (M) button again to re-enter the PROGRAM mode. If the Mode button is pressed within 1 minute of exiting the PROGRAM mode, the password is not required to access the parameters. After one minute, the password must be re-entered to access the parameters again.

P500 parameter provides a history of the last 8 faults on the drive. It can be accessed without entering PROGRAM mode.

Figure 16 - VFD Screen

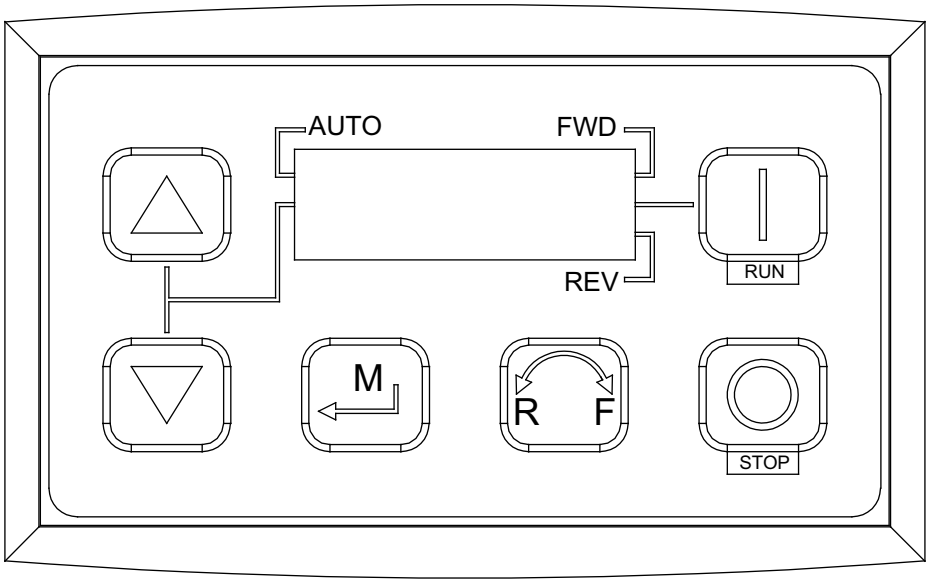

ACTECH SMV VFD

Table 6 - Cross Reference

HP	Part Number	Volts	1Ø Input	3Ø Input	Input Amps 1Ø 120V AC	Input Amps 1Ø 240V AC	Output Amps	Breaker 1Ø 120V AC	Breaker 1Ø 240V AC
0.5	ESV371N01SXB	120/240V	X	-	9.2	4.6	2.4	15	15
1	ESV751N01SXB	120/240V	X	-	16.6	8.3	4.2	25	15
1.5	ESV112N01SXB	120/240V	X	-	20	10	6	30	20

HP	Part Number	Volts	1Ø Input	3Ø Input	Input Amps 1Ø	Input Amps 3Ø	Output Amps	Breaker 1Ø	Breaker 3Ø
0.5	ESV371N02YXB	240V	X	X	5.1	2.9	2.4	15	15
1	ESV751N02YXB	240V	X	X	8.8	5	4.2	15	15
1.5	ESV112N02YXB	240V	X	X	12	6.9	6	20	15
2	ESV152N02YXB	240V	X	X	13.3	8.1	7	25	15
3	ESV222N02YXB	240V	X	X	17.1	10.8	9.6	30	20
5	ESV402N02TXB	240V	-	X	-	18.6	16.5	-	30
7.5	ESV552N02TXB	240V	-	X	-	26	23	-	40
10	ESV752N02TXB	240V	-	X	-	33	29	-	50
15	ESV113N02TXB	240V	-	X	-	48	42	-	80
20	ESV153N02TXB	240V	-	X	-	59	54	-	90
1	ESV751N04TXB	480V	-	X	-	2.5	2.1	-	15
1.5	ESV112N04TXB	480V	-	X	-	3.6	3	-	15
2	ESV152N04TXB	480V	-	X	-	4.1	3.5	-	15
3	ESV222N04TXB	480V	-	X	-	5.4	4.8	-	15
5	ESV402N04TXB	480V	-	X	-	9.3	8.2	-	15
7.5	ESV552N04TXB	480V	-	X	-	12.4	11	-	20
10	ESV752N04TXB	480V	-	X	-	15.8	14	-	25
15	ESV113N04TXB	480V	-	X	-	24	21	-	40
20	ESV153N04TXB	480V	-	X	-	31	27	-	50
25	ESV183N04TXB	480V	-	X	-	38	34	-	70
30	ESV223N04TXB	480V	-	X	-	45	40	-	80
40	ESV303N04TXB	480V	-	X	-	59	52	-	100
50	ESV373N04TXB	480V	-	X	-	74	65	-	125
60	ESV453N04TXB	480V	-	X	-	87	77	-	150
1	ESV751N06TXB	600V	-	X	-	2	1.7	-	15
2	ESV152N06TXB	600V	-	X	-	3.2	2.7	-	15
3	ESV222N06TXB	600V	-	X	-	4.4	3.9	-	15
5	ESV402N06TXB	600V	-	X	-	6.8	6.1	-	15
7.5	ESV552N06TXB	600V	-	X	-	10.2	9	-	20
10	ESV752N06TXB	600V	-	X	-	12.4	11	-	20
15	ESV113N06TXB	600V	-	X	-	19.7	17	-	30
20	ESV153N06TXB	600V	-	X	-	25	22	-	40
25	ESV183N06TXB	600V	-	X	-	31	27	-	50
30	ESV223N06TXB	600V	-	X	-	36	32	-	60
40	ESV303N06TXB	600V	-	X	-	47	41	-	70
50	ESV373N06TXB	600V	-	X	-	59	52	-	90
60	ESV453N06TXB	600V	-	X	-	71	62	-	110

Remote Control Panel

On units shipped with the optional remote control panel, an electrical drop containing the panel wiring is provided with the heater. There is a terminal strip inside the remote panel that matches the terminals in the heater unit. The remote panel should be wired as shown in **Figure 17**. Wiring may vary by unit, refer to electrical schematics that were provided with your unit.

Figure 17 - Typical Remote Control Panel Wiring

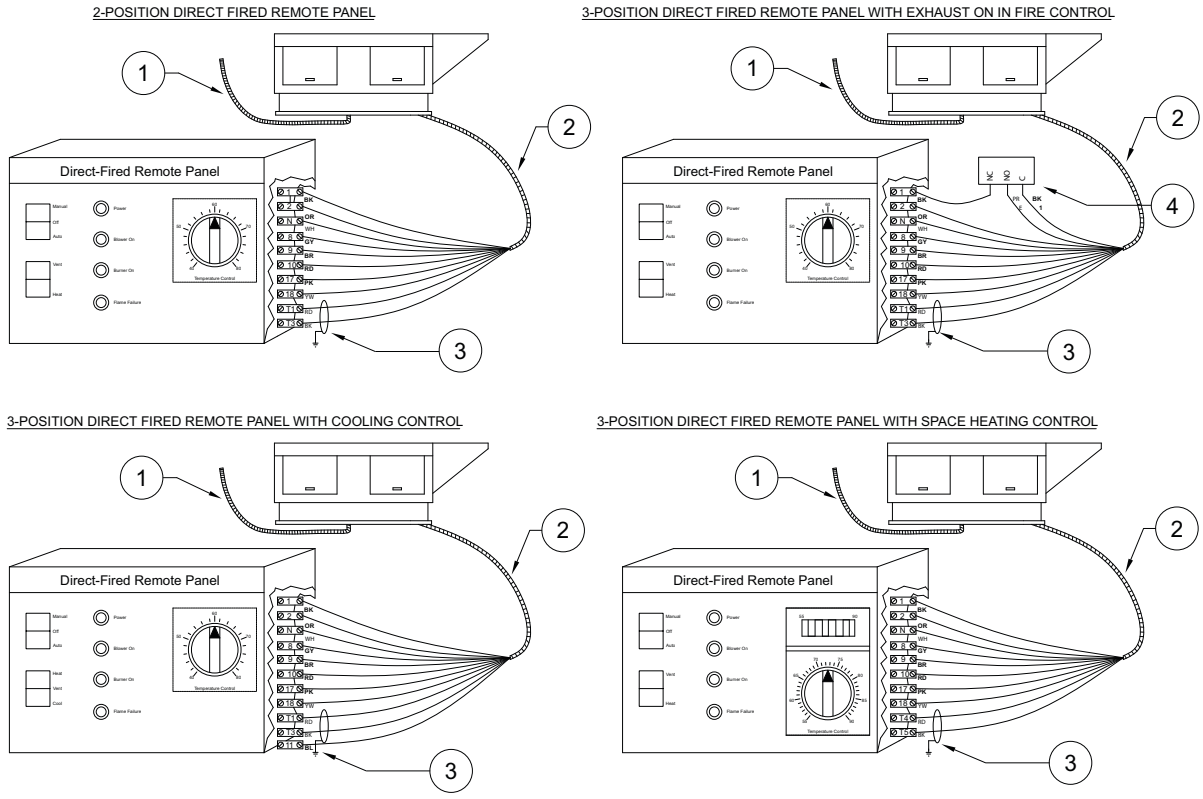

1. Motor Connection
2. Control Connection
3. Shielded Cable
4. Fire System Micro-switch

START-UP OPERATION

Before starting up or operating the unit, verify all fasteners are secure and tight. Check the set screw in the wheel hub, bearings, and the fan sheaves (pulleys). With power and gas **OFF** to the unit or before connecting the unit to power, turn the fan wheel by hand. Verify it is not striking the inlet or any obstructions. If necessary, re-center.

Special Tools Required: Standard Hand Tools, AC Voltage Meter, Tachometer, Amperage Meter, Manometer, Differential Pressure Gauge

Start-up Procedure

1. Check all electrical connections are secure and tight.
2. Check pulley alignment and belt tension. Refer to **"Pulley Alignment/Proper Belt Tension" on page 29**.
3. Inspect the condition of the intake damper and damper linkage, if applicable.
4. Remove intake filters if not already installed, inspect the air stream for obstructions. Install intake filters.
5. Compare the supplied **motor voltage** with the fan's nameplate voltage. If this does not match, correct the problem.
6. Place the external disconnect to the **ON** position to start the unit. Immediately place the disconnect switch off. **Check the rotation of the fan** with the directional arrow on the blower scroll. Reversed rotation will result in poor air performance, motor overloading and possible burnout. For units equipped with a single-phase motor, check the motor wiring diagram to change rotation. For 3-phase motors, any two power leads can be interchanged to reverse motor direction.
7. When the fan is started, observe the operation and check for any unusual noises.
8. Place the external disconnect switch back to the **ON** position. The system should be in full operation with all ducts attached. Measure the system airflow. The motor sheave (pulley) is variable pitch and allows for an increase or decrease of the fan RPM. If an adjustment is needed, refer to **"Pulley Adjustment" on page 28**. Refer to **"Pulley Combination Chart" on page 30** for adjustment specifications.
9. Once the proper airflow is achieved, measure and record the fan speed with a reliable tachometer. **Caution - Excessive speed will result in motor overloading or bearing failure. Do not set fan RPMs higher than specified in the maximum RPM chart.** Refer to **"Troubleshooting" on page 43** for more information.
10. Measure and record the **voltage** and **amperage** to the motor. Compare with the motor's nameplate to determine if the motor is operating under safe load conditions. Once the RPM of the ventilator has been properly set, disconnect power. Re-check belt tension and pulley alignment, refer to **"Pulley Alignment/Proper Belt Tension" on page 29**.

Pulley Adjustment

The adjustable motor pulley is factory set for the RPM specified (**Table 7**). Speed can be increased by closing or decreased by opening the adjustable motor sheave. Two groove variable pitch pulleys must be adjusted to an equal number of turns open or closed. Any increase in speed represents a substantial increase in horsepower required by the unit. Motor amperage should always be checked to avoid serious damage to the motor when the speed is varied. Always torque set screws according to the torque specifications shown in **Figure 18**.

Figure 18 - Adjustable Pulley

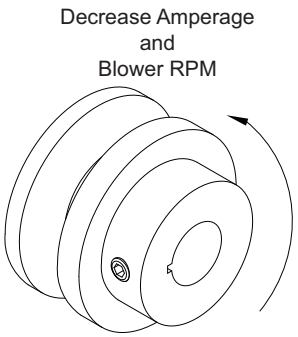

Setscrew Thread Size	Torque (in-lbs)
No. 10 (bushing)	32
1/4” (bushing)	72
5/16”	130

Table 7 - Maximum RPM and HP Chart

Belt Drive		
Blower Size	**Max. RPM**	**Max. HP**
10”	1800	2
12”	1500	3
15”	1400	5
18”	1200	5
20”	1000	10
25”	900	20

Direct Drive		
Blower Size	**Max. RPM**	**Max. HP**
15D	1800	2
20D	1500	3
24D	1400	5
30D	1200	5
36D	1000	10
16Z	2400	4
18Z	3200	5
20Z	2300	5
22Z	1900	5
25Z	1800	8
28Z	1400	7

Pulley Alignment/Proper Belt Tension

1. Belts tend to stretch and settle into pulleys after an initial start-up sequence. **Do not tension belts by changing the setting of the motor pulley**, this will change the fan speed and may damage the motor.
   - To re-tension belts, turn OFF power to the fan motor.
   - Loosen the fasteners that hold the blower scroll plate to the blower.
   - Rotate the motor to the left or right to adjust the belt tension. Belt tension should be adjusted to allow 1/64” of deflection per inch of belt span. Use extreme care when adjusting V-belts as not to misalign pulleys. Any misalignment will cause a sharp reduction in belt life and produce squeaky noises. Over-tightening will cause excessive belt and bearing wear as well as noise. Too little tension will cause slippage at startup and uneven wear.
   - **Whenever belts are removed or installed, never force belts over pulleys without loosening motor first to relieve belt tension.** When replacing belts, use the same type as supplied by the manufacturer. On units shipped with double groove pulleys, matched belts should always be used.
2. All fasteners should be checked for tightness each time maintenance checks are performed before restarting unit.

Belt tension examples:

- Belt span 12” = 3/16” deflection
- Belt span 32” = 1/2” deflection

Figure 19 - Pulley Alignment/Belt Tension

A. Belt Span Length
B. Deflection
C. Center Distance

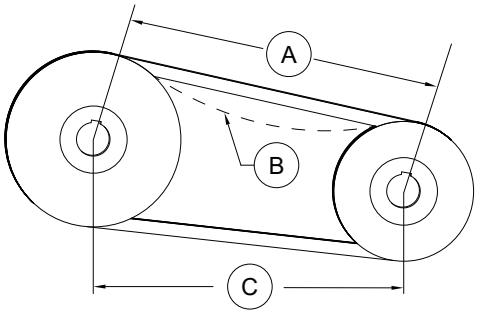

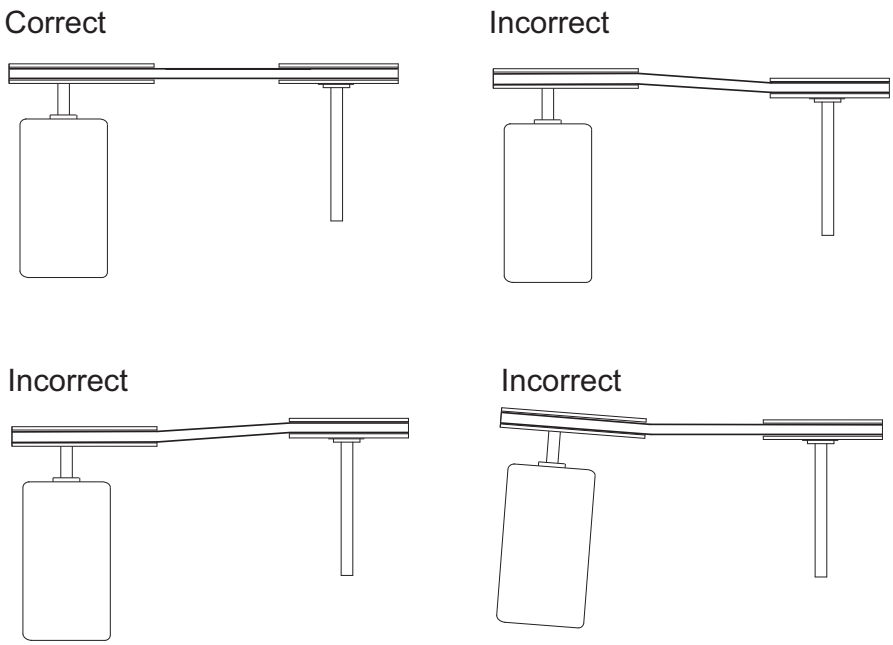

Pulley Combination Chart

10 - 20 IN. BLOWER**

Motor RPM 1725

1/3 to 1-1/2 HP — **AX BELTS** — MOTOR PULLEY 1VL34 — Dd1 1.9 — Dd2 2.9 — Pd1 2 — Pd2 3

BLOWER PULLEY	DATUM DIAMETER	PITCH DIAMETER	Open				TURNS ON MOTOR PULLEY						Closed
			5	4 1/2	4	3 1/2	3	2 1/2	2	1 1/2	1	1/2	0
AK114	11	11.2	308	323	339	354	370	385	400	416	431	447	462

1/3 to 2 HP — **AX BELTS** — MOTOR PULLEY 1VL40 — Dd1 2.4 — Dd2 3.4 — Pd1 2.6 — Pd2 3.6

BLOWER PULLEY	DATUM DIAMETER	PITCH DIAMETER	Open				TURNS ON MOTOR PULLEY						Closed
			5	4 1/2	4	3 1/2	3	2 1/2	2	1 1/2	1	1/2	0
AK114	11	11.2	400	416	431	447	462	477	493	508	524	539	554
AK94	9	9.2	488	506	525	544	563	581	600	619	638	656	675
AK79	7.5	7.7	582	605	627	650	672	694	717	739	762	784	806
AK66	6.2	6.4	701	728	755	782	809	836	863	889	916	943	970
AK54	5	5.2	863	896	929	962	995	1028	1062	1095	1128	1161	1194
AK46	4.2	4.4	1019	1059	1098	1137	1176	1215	1255	1294	1333	1372	1411
AK39	3.5	3.7	1212	1259	1305	1352	1399	1445	1492	1539	1585	1632	1678
AK32	3	3.2	1402	1455	1509	1563	1617	1671	1725	1779	1833	1887	1941

3 to 5 HP — **BX BELTS** — MOTOR PULLEY 2VP42 — Dd1 2.9 — Dd2 3.9 — Pd1 3 — Pd2 4

BLOWER PULLEY	DATUM DIAMETER	PITCH DIAMETER	Open					TURNS ON MOTOR PULLEY							Closed
			6	5 1/2	5	4 1/2	4	3 1/2	3	2 1/2	2	1 1/2	1	1/2	0
2BK160H	15.4	15.7	330	339	348	357	366	375	385	394	403	412	421	430	439
2BK140H	13.4	13.7	378	388	399	409	420	430	441	451	462	472	483	493	504
2BK120H	11.4	11.7	442	455	467	479	491	504	516	528	541	553	565	577	590
2BK110H	10.4	10.7	484	497	511	524	537	551	564	578	591	605	618	631	645
2BK100H	9.4	9.7	534	548	563	578	593	608	622	637	652	667	682	697	711
2BK90H	8.4	8.7	595	611	628	644	661	677	694	710	727	744	760	777	793
2BK80H	7.4	7.7	672	691	709	728	747	765	784	803	821	840	859	877	896
2BK70H	6.4	6.7	772	794	815	837	858	880	901	923	944	965	987	1008	1030
2BK60H	5.4	5.7	908	933	958	984	1009	1034	1059	1084	1110	1135	1160	1185	1211
2BK55H	4.9	5.2	995	1023	1050	1078	1106	1133	1161	1189	1216	1244	1272	1299	1327
2BK50H	4.4	4.7	1101	1132	1162	1193	1223	1254	1285	1315	1346	1376	1407	1438	1468

7-1/2 to 10 HP — **BX BELTS** — MOTOR PULLEY 2VP60 — Dd1 4.3 — Dd2 5.5 — Pd1 4.7 — Pd2 5.9

BLOWER PULLEY	DATUM DIAMETER	PITCH DIAMETER	Open					TURNS ON MOTOR PULLEY							Closed
			6	5 1/2	5	4 1/2	4	3 1/2	3	2 1/2	2	1 1/2	1	1/2	0
2BK160H	15.4	15.7	516	527	538	549	560	571	582	593	604	615	626	637	648
2BK140H	13.4	13.7	592	604	617	630	642	655	667	680	693	705	718	730	743
2BK120H	11.4	11.7	693	708	722	737	752	767	781	796	811	826	840	855	870
2BK110H	10.4	10.7	758	774	790	806	822	838	854	871	887	903	919	935	951
2BK100H	9.4	9.7	836	854	871	889	907	925	943	960	978	996	1014	1031	1049
2BK90H	8.4	8.7	932	952	972	991	1011	1031	1051	1071	1091	1110	1130	1150	1170
2BK80H	7.4	7.7	1053	1075	1098	1120	1143	1165	1187	1210	1232	1255	1277	1299	1322

25 IN. BLOWER

3 to 5 HP — **BX BELTS** — MOTOR PULLEY 2VP42 — Dd1 2.9 — Dd2 3.9 — Pd1 3 — Pd2 4

BLOWER PULLEY	DATUM DIAMETER	PITCH DIAMETER	Open					TURNS ON MOTOR PULLEY							Closed
			6	5 1/2	5	4 1/2	4	3 1/2	3	2 1/2	2	1 1/2	1	1/2	0
2B5V278	27.8	28.1	184	189	194	200	205	210	215	220	225	230	235	240	246
2B5V250	25	25.3	205	210	216	222	227	233	239	244	250	256	261	267	273
2B5V234	23.4	23.7	218	224	230	237	243	249	255	261	267	273	279	285	291
2B5V200	20	20.3	255	262	269	276	283	290	297	304	312	319	326	333	340
2B5V184	18.4	18.7	277	284	292	300	307	315	323	331	338	346	354	361	369
2B5V160	16	16.3	317	326	335	344	353	362	370	379	388	397	406	414	423
2B5V154	15.4	15.7	330	339	348	357	366	375	385	394	403	412	421	430	439
2B5V136	12.6	12.9	401	412	423	435	446	457	468	479	490	501	513	524	535
2B5V124	12.4	12.7	407	419	430	441	453	464	475	487	498	509	521	532	543
2B5V110	11	11.3	458	471	483	496	509	522	534	547	560	572	585	598	611

7-1/2 to 10 HP — **BX BELTS** — MOTOR PULLEY 2VP60 — Dd1 4.3 — Dd2 5.5 — Pd1 4.7 — Pd2 5.9

BLOWER PULLEY	DATUM DIAMETER	PITCH DIAMETER	Open					TURNS ON MOTOR PULLEY							Closed
			6	5 1/2	5	4 1/2	4	3 1/2	3	2 1/2	2	1 1/2	1	1/2	0
2B5V278	27.8	28.1	289	295	301	307	313	319	325	331	338	344	350	356	362
2B5V250	25	25.3	320	327	334	341	348	355	361	368	375	382	389	395	402
2B5V234	23.4	23.7	342	349	357	364	371	378	386	393	400	408	415	422	429
2B5V200	20	20.3	399	408	416	425	433	442	450	459	467	476	484	493	501
2B5V184	18.4	18.7	434	443	452	461	470	480	489	498	507	517	526	535	544
2B5V160	16	16.3	497	508	519	529	540	550	561	571	582	593	603	614	624
2B5V154	15.4	15.7	516	527	538	549	560	571	582	593	604	615	626	637	648
2B5V136	12.6	12.9	628	642	655	669	682	695	709	722	735	749	762	776	789
2B5V124	12.4	12.7	638	652	666	679	693	706	720	733	747	761	774	788	801
2B5V110	11	11.3	717	733	748	763	779	794	809	824	840	855	870	885	901

15 to 20 HP — **BX BELTS** — MOTOR PULLEY 2VP75 — Dd1 5.8 — Dd2 7 — Pd1 6.2 — Pd2 7.4

BLOWER PULLEY	DATUM DIAMETER	PITCH DIAMETER	Open					TURNS ON MOTOR PULLEY							Closed
			6	5 1/2	5	4 1/2	4	3 1/2	3	2 1/2	2	1 1/2	1	1/2	0
2B5V278	27.8	28.1	381	387	393	399	405	411	417	424	430	436	442	448	454
2B5V250	25	25.3	423	430	436	443	450	457	464	470	477	484	491	498	505
2B5V234	23.4	23.7	451	459	466	473	480	488	495	502	509	517	524	531	539
2B5V200	20	20.3	527	535	544	552	561	569	578	586	595	603	612	620	629
2B5V184	18.4	18.7	572	581	590	600	609	618	627	636	646	655	664	673	683
2B5V160	16	16.3	656	667	677	688	698	709	720	730	741	751	762	773	783
2B5V154	15.4	15.7	681	692	703	714	725	736	747	758	769	780	791	802	813
2B5V136	12.6	12.9	829	842	856	869	883	896	909	923	936	949	963	976	990

** 2HP Motors on 20 IN Blowers use 2VP42 Pulleys

Pilot Adjustment

1. Restart the fan and check the gas supply pressure at the inlet gas gauge upstream of all electronic valves. The inlet pressure should be **7 - 14 inches wc (7 inches wc - 5 psi on Size 4-5 heaters)**. If the inlet pressure is too high, install an additional pressure regulator external to the unit.
2. Open the field-installed manual gas shut-off valve and the manual main gas valve on the combination gas control valve.
3. Close the ball valve located inside the cabinet.
4. Call for heat with the intake air thermostat (turn set-point to temperature above outside air) and allow the pilot to light. If the pilot does not light, purge the pilot line. If air purging is required, disconnect the pilot line at the outlet of the pilot valve.
5. Check the **pilot flame voltage** at the Flame Safety Control interface test jacks. A weak pilot flame can be caused by low gas pressure, or a dirty pilot orifice.
6. To adjust the pilot flame, remove the cap from the pilot adjustment screw on the combination gas valve. Increase the pilot gas flow by turning the screw counter-clockwise. Decrease the pilot gas flow by turning the screw clockwise. The pilot DC voltage should read **12V DC minimum and should typically be 15V DC**.
7. Once the pilot has been established, open the main manual gas shut-off valve downstream of the electronic valves. Check to make sure that the main gas valve opens, and gas flows to the burner.

Figure 20 - Pilot Assembly

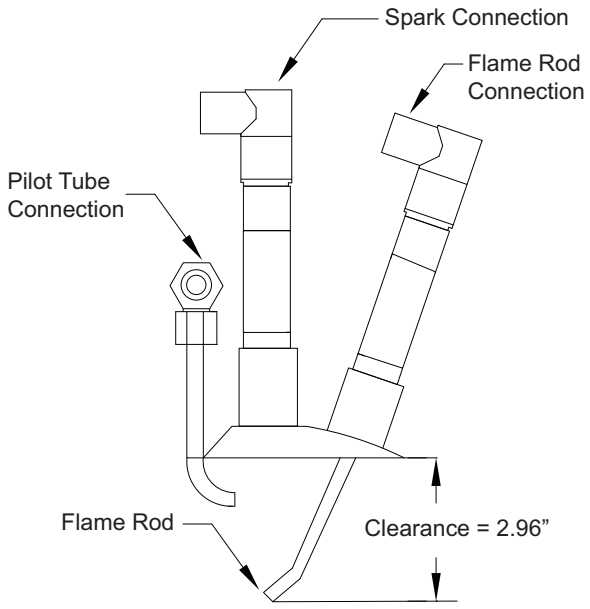

Main Burner Adjustment

1. Once the pilot has been properly established, the manifold gas pressure or temperature rise should be adjusted to jobsite conditions. The gas pressure regulator (integral to the combination gas control on size 1-3 heaters and located in the modulating valve on size 4-5 heaters) is adjusted at the factory for average gas conditions. It is important that the gas be supplied to the burner in accordance with the input rating on the rating plate.
2. Create a high fire call for heat. This should be done with the blower on and all gas controls on. High fire can be achieved by removing the wire at terminal **#4** (remove wires #2 and #4 for Maxitrol 44 systems) from the amplifier.
3. The manifold pressure should be checked at the pressure gauge downstream of the modulating valve. The graph indicates the proper manifold pressure for the desired amount of BTUs per foot of burner. For natural gas systems, the high fire manifold pressure should not exceed **5 inches wc**. For propane gas, the high fire manifold pressure should not exceed **2.5 inches wc**. Another method of checking high fire is to measure the temperature rise of the unit. The temperature rise should be set to design conditions and typically is minimum 70°F.
4. Remove the cap from the combination gas valve regulator adjustment (size 1-3) or the cap from the MR212 valve (size 4-5). Using the regulator pressure adjusting screw, adjust the high fire manifold pressure to 5 inches wc maximum for natural gas and 2.5 inches wc maximum for propane gas. High fire should be set to generate the desired temperature rise. If the high fire screw is at the end of its adjustment and more pressure is needed, then adjust the main building gas pressure regulator spring (located external to the unit) to achieve the proper manifold pressure. Turning the regulator screw clockwise will increase pressure and counter-clockwise will decrease pressure. **Remember - The high fire DC voltage should read 12V DC minimum and should typically be 15V DC on the Flame Safety Controller test jacks.**
5. Reconnect the wire on the amplifier at terminal **#4** (wires #2 and #4 for Maxitrol 44).
6. The low fire manifold pressure must now be set. Low fire can be achieved by removing the wire at terminal **#5** from the amplifier (remove #8 for Maxitrol 44). Check the low fire flame signal to ensure that the **DC voltage is 12V DC minimum** on the Flame Safety Controller test jacks.
7. Using the bypass screw (located on the side of the M511 and M611 valves, and under the cap of the MR212 valve), adjust the low fire manifold pressure until there is a very thin flame along the entire length of the burner. No dark spots should be seen in the burner. The burner may be observed through the view-port located on the external wall of the heater. Replace the cap to the valve and restore all of the original wiring on the amplifier and gas components.
8. A final gas leak check shall be performed to verify the gas-tightness of the heater's components and piping under normal operating conditions. This can be done by measuring the gas pressure at the 1/4" gas plug just downstream of the modulating valve.

Table 8 - Mod Valve Voltage

Volts DC	Firing Mode
0 to 5V DC	Low Fire
5 to 15V DC	Modulation
15 to 20V DC	High Fire

Figure 21 - Maxitrol Low Fire Bypass Screw Setting

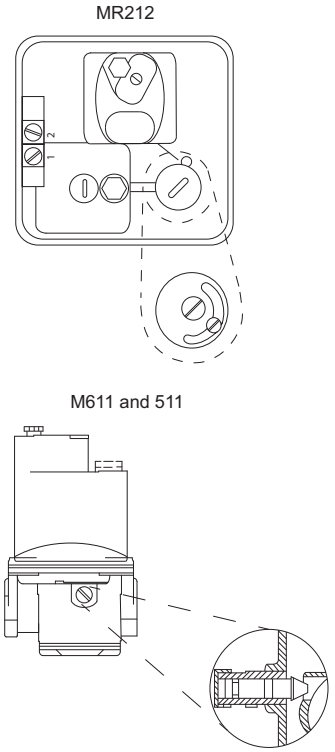

Figure 22 - Pressure vs. Firing Rate

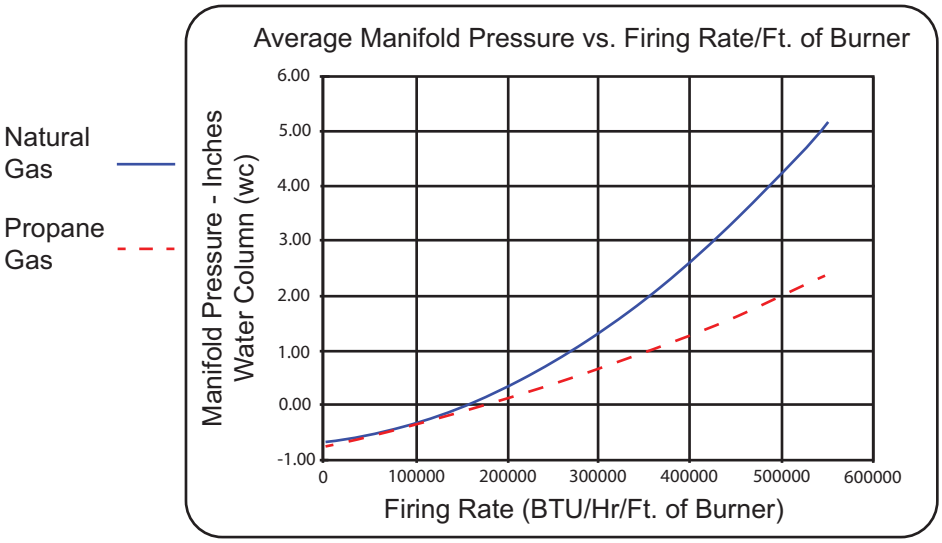

Heater Start-up Summary

1. Is the incoming gas pressure 7”-14”?
   - Yes – If the incoming pressure is correct, continue with step 2.
   - No – If the incoming pressure is incorrect, adjust incoming gas pressure.
2. Adjust the pilot flame. Lock unit into high fire. Does high fire product at least a 70°F temperature rise and the correct manifold pressure?
   - Yes – If the temperature rise and manifold pressure are correct, continue with step 3.
   - No – If the temperature rise and manifold pressure are incorrect, adjust high fire.
3. Lock unit into low fire. Does a thin flame fill entire burner length?
   - Yes – If the flame is correct, the burner start-up is complete.
   - No – If the flame is incorrect, adjust the low fire setting.

Final Start-up Procedure

1. With the air and burner systems in full operation and all ducts attached, measure the system airflow. The motor sheave (pulley) is variable pitch, and allows for an increase or decrease of the fan RPM. If an adjustment is needed, refer to **“Pulley Adjustment” on page 28**. Refer to **“Pulley Combination Chart” on page 30** for adjustment specifications.
2. Once the proper airflow is achieved, measure and record the fan speed with a reliable tachometer. **Caution - Excessive speed will result in motor overloading or bearing failure. Do not set fan RPMs higher than specified in the maximum RPM chart.** See the troubleshooting guide for more information.
3. Measure and record the **voltage** and **amperage** to the motor and compare with the motor nameplate to determine if the motor is operating under safe load condition.
4. Once the rpm of the ventilator has been properly set, disconnect power and recheck belt tension and pulley alignment as shown in **Figure 19 on page 29**.

Sequence of Operation

To better understand the direct-fired heater, it is easier to break the unit out into smaller individual systems. There are two main systems, a make-up air fan, and a heater. The make-up air fan consists of a blower and motor. The heater may be further broken down into two control systems, the Flame Safety Control (FSC) and the Modulating Gas System (MGS). The burner mixes air with the gas (Natural or LP), which heats the air.

Flame Safety Control

The first system to understand is the Flame Safety Controller. The FSC is there ***only*** to monitor the flame, **NOT** to control the temperature. The FSC uses a flame rectification sensor mounted on the pilot assembly to detect the presence of flame in the burner.

Flame strength and presence can be measured at the FSC by reading the rectified flame signal. Use a DC voltage meter, attach leads to the test jacks on the top of the control. Flame is present when DC voltage reads between 6 and 18V DC. Ideal flame intensity produces a signal of 12V DC or higher.

The FSC is also wired into an airflow switch, which relays whether there is proper airflow through the unit (not *just* any airflow, but *proper* airflow). Proper airflow occurs when there is a .15” wc to .80” wc differential pressure drop across the burner.

When the airflow through the heater produces differential pressure in this range, the FSC indicates so by illuminating the AIRFLOW LED. The FSC controls the opening of the redundant solenoid gas valves and the operation of the spark igniter to initiate a pilot flame upon start-up.

Figure 23 - Flame Safety Controller

DC Voltage	Flame Status
0 to 5V DC	No Flame
6 to 11V DC	Weak Flame
12 to 18V DC	Strong Flame

The **OPR CTRL** LED indicates that there is power to the FSC. Next, the **AIRFLOW** LED will come on if there is proper airflow through the unit. Third, the unit will pause to purge any gases or combustible vapors before attempting flame ignition. Then, there is a Pilot Trial For Ignition (PTFI), and the **PTFI** LED comes on. During PTFI, the FSC opens the pilot gas valve and allows gas to flow to the pilot assembly. At the same moment, the spark igniter is started, causing the spark to ignite the pilot gas. When the flame rod sensor detects the flame, it turns on the **FLAME** LED, turns off the PTFI LED, and powers the modulating gas system. This is the system's normal operating mode. The FSC continues to monitor the flame and airflow. Once this occurs, the unit is in the main flame cycle and thus powers the main gas valve and the modulating gas system. This is the normal operating mode. The FSC continues to monitor the flame and airflow.

The last LED on the FSC is the **ALARM** LED. The alarm will turn on when the FSC determines an unsafe condition has occurred and will not allow the unit to recycle for heat until it has properly been reset. Anytime the FSC goes into "Alarm" mode, the issue must be diagnosed and corrected to avoid further lockouts after resetting. If the unit fails to light the first time, the unit will try one more time before locking out. This retry will not occur if the No FSC reset option is enabled. To begin troubleshooting, or to reset the FSC, shutdown power to the unit. Restart the unit. This will clear the alarm.

Figure 24 - Proper Spark Gap

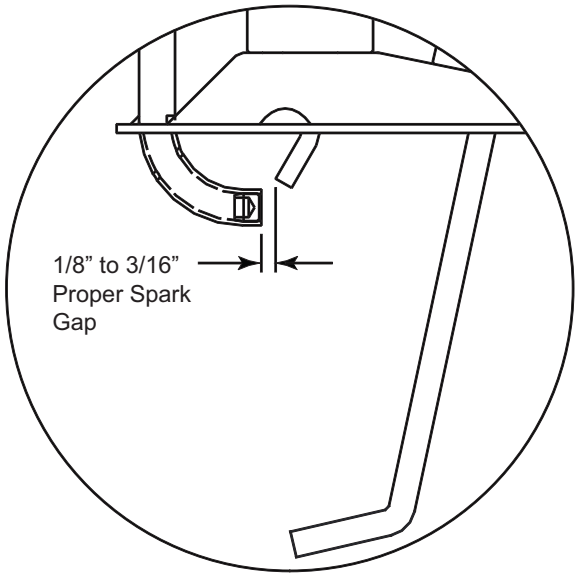

Modulating Gas System

The second system, the **modulating gas system,** consists of a temperature selector dial, a discharge air sensor, an amplifier, and a modulating gas valve. The two types of modulating gas systems used are the Maxitrol 14 or RTC Solutions controls and the Maxitrol 44 series. The Maxitrol 14/RTC utilizes a discharge air sensor and modulates the Maxitrol gas valve to provide discharge air to match the selected temperature on the temperature selector. The Maxitrol 44 utilizes a room temperature sensor to control room temperature as well as a discharge air sensor in order to control the discharge air temperature. The modulating gas valve controls the amount of gas flow to the burner based on the temperature rise needed. When the modulating gas valve is all the way open and achieving the maximum BTUs and temperature rise of the unit, it is called “high fire”.

Figure 25 - Maxitrol 14 Amplifier

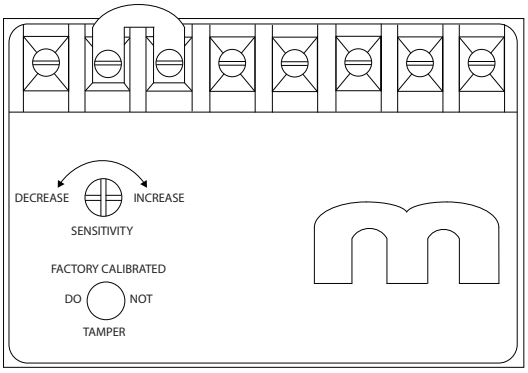

High Temperature Limit

One of the backup safety devices is the **high temperature limit** switch. This switch is a mechanical thermostat that measures the temperature inside the unit downstream of the burner. If the factory-set temperature of **170°F** is exceeded, it will signal the FSC to turn off the burner. This requires a manual reset of the high temperature limit. This ensures that the discharge does not exceed 185°F.

Figure 26 - High Temperature Limit Control

1. Temperature Setting
2. Adjustment Screw
3. Manual Reset Button

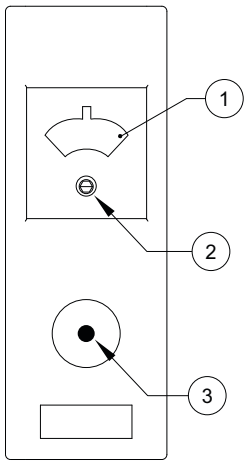

Air Flow Switch

Figure 27 - Air Flow Switch

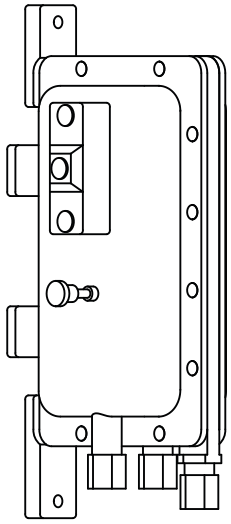

There are both high and low **airflow switches** contained within one housing measuring the pressure drop across the burner. This is to ensure that there is proper airflow **(.15 inches wc to .80 inches wc**) across the burner and proper combustion at all times. Both switches are wired in series and have single pole double throw (one common contact, one normally open contact, and one normally closed contact) switches that are 'switched' by air pressure.

There are two airflow tubes in the heater, located near the burner and profile plate assembly (profile plates surround the burner and control air into the burner section). In the case of clogged filters, blocked intake, excessive duct static pressure, or a broken belt, the correct burner differential pressure may not be achieved, not allowing the low airflow switch to close. The high airflow switch protects against profile plate failures that cause excessive airflow through the burner. In the event that the pressure drop across the burner is not in the range of the airflow switch, gas flow to the burner is stopped by the Flame Safety Control.

The graphs in **Figure 28** illustrate the approximate CFM going through the unit vs. the differential pressure measured by the airflow switch. Simply measure the differential profile pressure drop at the airflow tubes in the unit and match that value up to the matching unit curve below. This will show the CFMs traveling through the burner and will indicate proper airflow or airflow problems (too much or not enough). **If the pressure drop is outside of the .15" to .80" range, the blower RPM should be adjusted to fix airflow**.

Figure 28 - CFM Charts

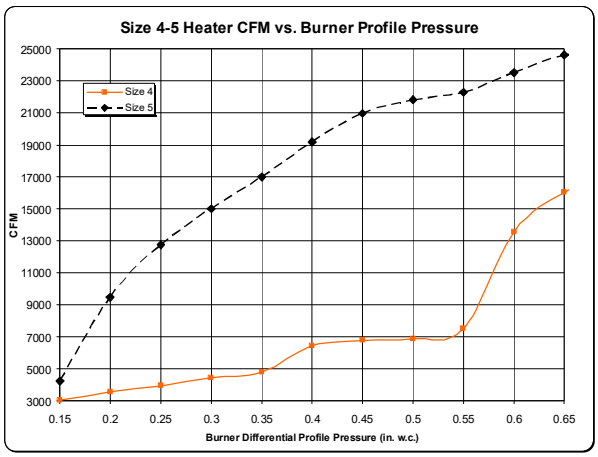

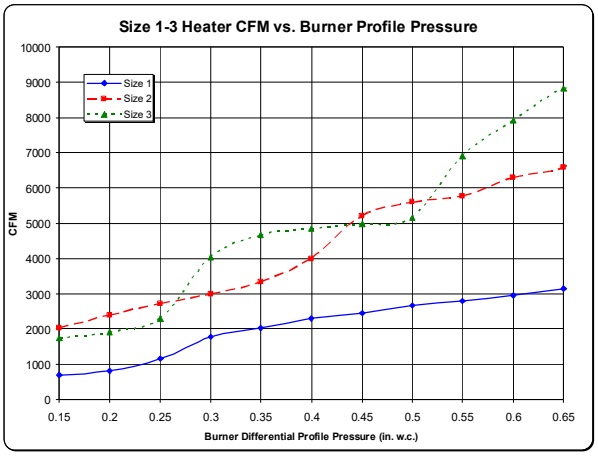

Optional Remote Panel Circuit

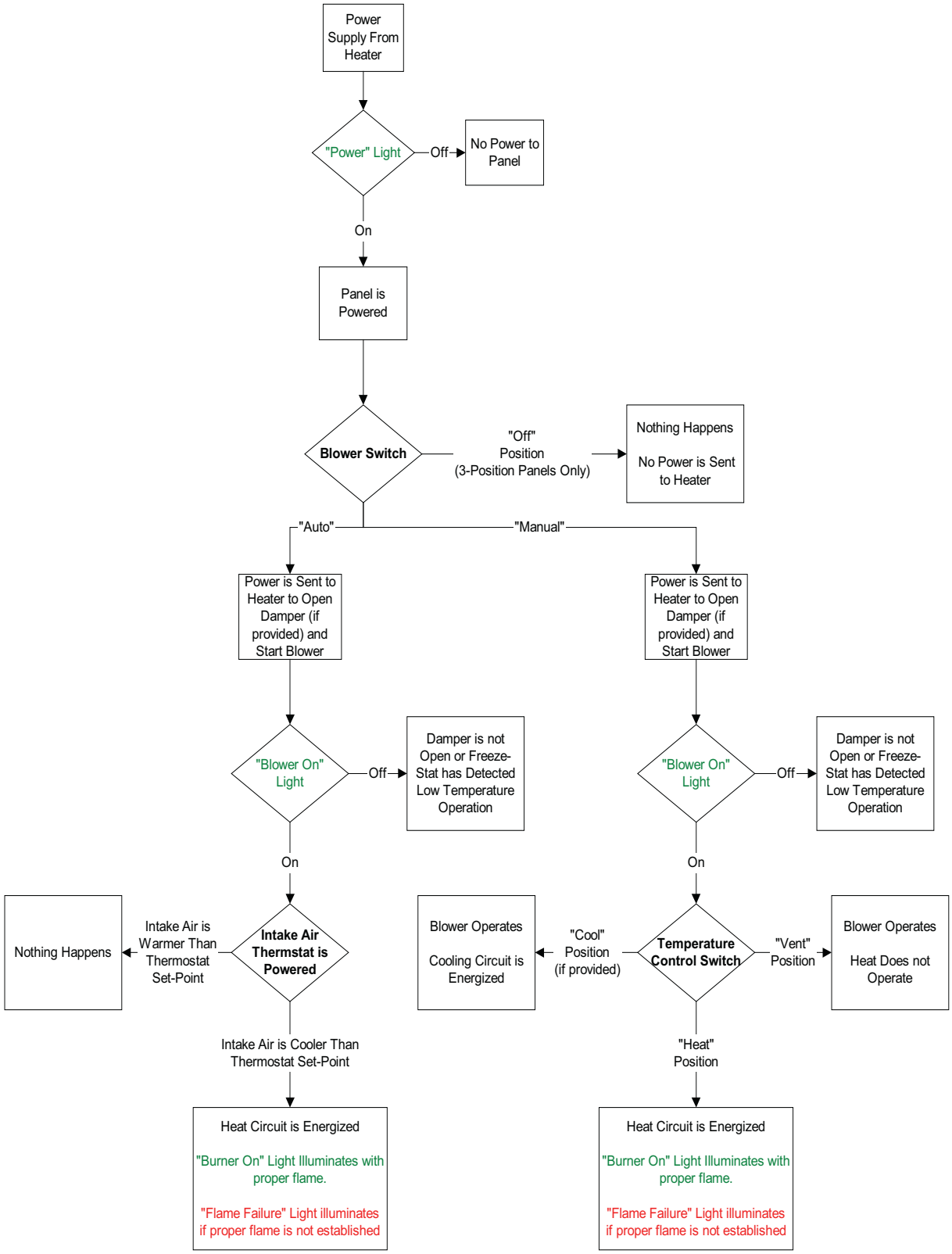

Static Pressure Control (Photohelic)

The dampers can be controlled by a building static pressure control. This controller will sense the difference between pressure inside the building and pressure outside the building (sensed at the A-306 outdoor sensor) and will position the dampers to maintain the pressure setting on the controller. The controller has two setpoints and an indicator. The two setpoints are a minimum desired static pressure point and a maximum static pressure point.

The actual building static pressure will be shown by a visual indicator between these two settings. The controller will modulate the dampers to maintain a static pressure between these setpoints.

When the building's static pressure is below the minimum setting, the damper motor will proportionally open the fresh air damper and close the return air damper until static increases above the minimum setting. At this point, the damper motor will stop and hold this proportion.

If the building's static pressure continues to climb and goes above maximum setting, the damper motor will reverse proportion, closing the fresh air damper and opening the return air damper until static drops below maximum setting.

During the "OFF" or "Night" cycle of the unit, an internal switching circuit will close the return air damper.

See additional wiring and installation information on the static pressure controller and A-306 outdoor sensor.

Figure 29 - Photohelic Gauge

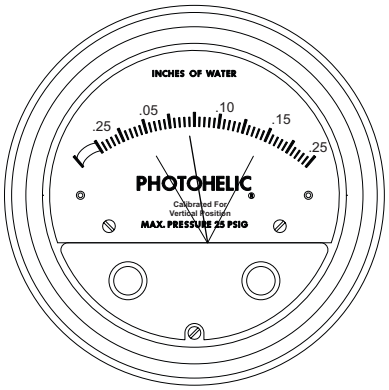

Static Pressure Controller Installation Instructions

Avoid locating the front of the static pressure controller in sun light or other areas with high ambient light or corrosive levels. Bright light shining on the photocells can cause false actuation of the load relays. The static pressure controller should be zeroed out before attaching the low and high pressure hoses. The zero adjustment is located between the minimum and maximum dials.

Using the supplied rubber tubing, plumb the high side of the static pressure controller to the inside of the building. The low side of the static pressure controller should be plumbed to the A-306 outdoor sensor. See the A-306 installation instructions.

Figure 30 - Static Pressure Controller

1. High Pressure Port
2. Low Pressure Port
3. Low Pressure to A-306 Outdoor Sensor
4. High Pressure to the Building

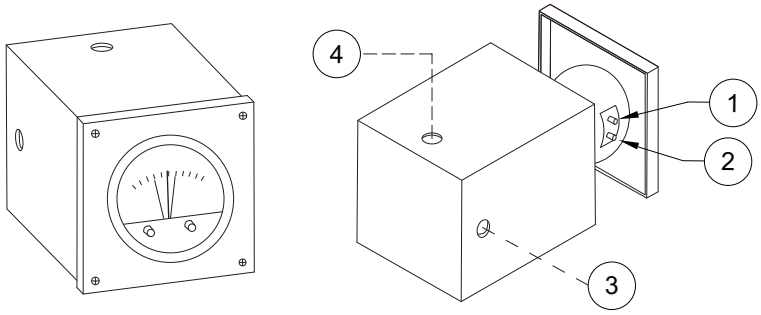

A-306 Outdoor Sensor

Use the installation instructions shipped with the A-306 Outdoor Sensor.

Figure 31 - A-306 Outdoor Sensor

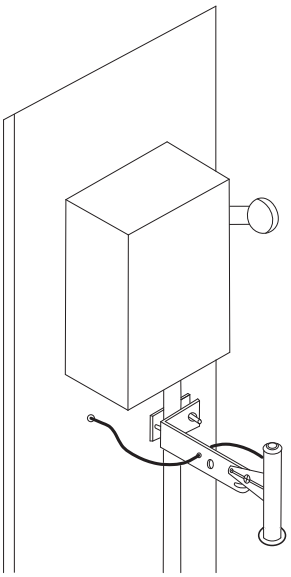

Item Number	Description
1	10-32 x 1/2" Machine Screw (2)
3	10-32 Nut (4)
4	10-32 x 1-3/4" Machine Screw (2)
028	Antenna Clamp
029	Mounting Bracket
163	Pick Up Body
164	Static Pressure Plates
165	"O" Ring Seal
168	Hole Plug
290	Tubing - 50'

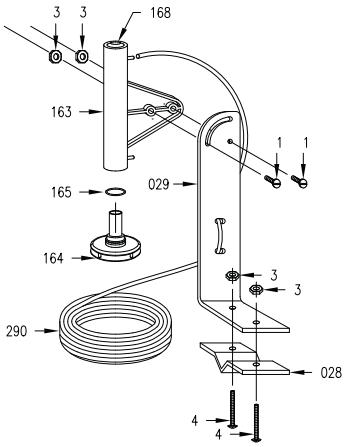

Remote Panel Option

The remote panel is a device used to control the operation of the heater from a remote location. This unit is available in both a “2 Position” and “3 Position” configuration, and with or without a cooling output. It also will accommodate both discharge and space heating configurations. It is important to understand the following remote panel controls and uses:

Figure 32 - Remote Heater Controls

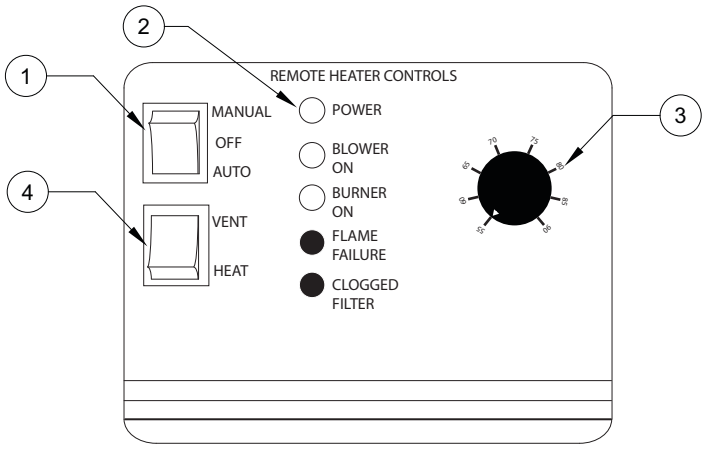

1. **Manual/Off/Auto Switch** - Used to control blower operation and tempering mode of unit. The **AUTO** position allows the unit to “decide”, through the use of the intake air thermostat, whether or not heating is needed. The **MANUAL** position allows the user to control whether or not heat is needed. The **OFF** position will turn the blower off when a “3 Position” remote panel is ordered. The **OFF** position will disable all temperature controls when a “2 Position” remote panel is ordered and fan power is then controlled by the pre-wire package only.
2. **Lights** - Displays the current status of unit features. The light definitions are as follows:

   POWER - Illuminated when there is power to the remote panel.

   BLOWER ON - Illuminated when the blower motor is powered.

   BURNER ON - Illuminates after pilot flame has established and main valve is powered.

   FLAME FAILURE - Illuminated when the Flame Safety Control is in alarm mode.

   CLOGGED FILTER – (Optional) Illuminated when the intake filters are dirty.
3. **Temperature Control** - Controls the discharge temperature of a standard unit. The temperature dial is replaced with a Maxitrol Selectrastat in space heating applications and is used to control the space temperature.
4. **Heat/Vent Switch** - This switch is powered when the Manual/Off/Auto switch is in the **MANUAL** position. It is used to control the tempering mode of the unit. The **VENT** position will prevent the burner from operating and the heater will deliver untempered air. The **HEAT** position will force the burner on and the unit will heat the incoming air. This switch becomes a Heat/Vent/Cool switch when the cooling interlock is ordered. This option provides a 120V cooling output from the remote panel.

Components

The following image and list outline the typical direct fired heater components and their functions.

Figure 33 - Typical Cabinet Components

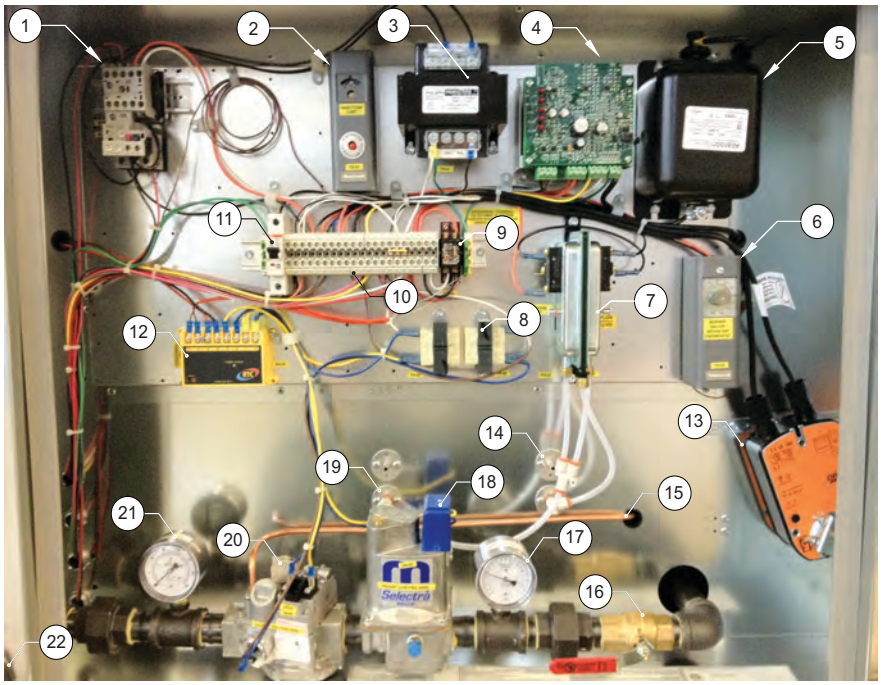

1. **Motor Starter** – Contactor with overload protection to start and protect motor.
2. **Manual Reset High Temperature Limit** – Safety device that prevents the heater from overheating.
3. **Power Transformer** – Installed when motor voltage is greater than120V. Used to provide 120V service to controls.
4. **Flame Safety Control** – Initiates and monitors flame.
5. **Ignition Transformer** – Produces high voltage spark to ignite flame.
6. **Intake Air Thermostat** – De-energize heating circuit when intake air exceeds set-point.
7. **Airflow Switch** – A safety device insuring proper air flow during burner operation.
8. **Control Transformer** – 120V primary; 24V secondary control transformer.
9. **Cooling Interlock Relay (Optional)** – Energizes power to cooling circuit on call for cooling.
10. **Terminal Strip** – Central location to terminate control wiring. Should be used for troubleshooting.
11. **Circuit Breaker** – Protects electrical components from high current spikes.
12. **Modulating Amplifier** - Regulates temperature by a modulating gas valve.
13. **Damper Actuator** – Motor containing end switch that opens intake damper.
14. **High Pressure Airflow Probe** – Measures profile pressure upstream of burner.
15. **Pilot Tubing** – Pilot tube connection to combination gas valve.
16. **Manual Gas Shut-Off Valve** – Allows gas flow to burner to be shut off to leak test gas train.
17. **Manifold Gas Pressure Gauge** – Manifold gas pressure should be read from here.
18. **Modulating Gas Valve** – Modulates gas flow to burner to provide proper air temperature.
19. **Low Pressure Airflow Probe** – Measures profile pressure downstream of burner.
20. **Combination Gas Valve** - A combination of redundant solenoid valves, pilot valve and gas regulator built into one unit.
21. **Inlet Gas Pressure Gauge** – Inlet gas pressure should be read from here.
22. **Gas Inlet** – Main gas supply connection.

Troubleshooting

The following table lists causes and corrective actions for possible problems with the fan units. Review this list prior to consulting manufacturer. The following table lists causes and corrective actions for possible problems with the fan units. Review this list before consulting manufacturer.

Airflow Troubleshooting Chart

Problem	Potential Cause	Corrective Action
Fan Inoperative	Blown fuse/Open circuit breaker	Check amperage.
		Check fuse, replace if needed.
		Check circuit breaker.
	Disconnect switch in “OFF” position	Place switch to the “ON” position.
	Incorrect wiring to motor	Inspect motor wiring. Verify connections with wiring diagram located on fan motor.
	Broken fan belt	Replace belt.
	Motor starter overloaded	Check amperage.
		Reset starter.
Motor Overload	Incorrect fan rotation	Verify that the fan is rotating in the direction shown on rotation label.
	Fan speed is too high	Reduce fan RPM.
	Incorrect wiring to motor	Inspect motor wiring. Verify connections with wiring diagram located on fan motor.
	Overload in starter set too low	Set overload to motor’s FLA value.
	Motor HP too low	Determine if HP is sufficient for job.
	Duct static pressure lower than design	Reduce fan RPM.
Insufficient Airflow	Incorrect fan rotation	Verify that the fan is rotating in the direction shown on rotation label.
	Poor outlet conditions	Check duct and connections. There should be a straight duct connection to the outlet.
	Intake damper not fully open	Inspect damper linkage. If the linkage is damaged, replace damper motor.
	Duct static pressure higher than design	Check ductwork. Adjust/resize to eliminate or reduce duct losses.
	Blower speed too low	Increase fan RPM. Do not overload motor.
	Supply grills or registers closed	Open/Adjust.
	Dirty/clogged filters	Clean filters. Replace filters if they cannot be cleaned or are damaged.
	Belt slippage	Adjust belt tension.
Excessive Airflow	Blower speed too high	Reduce fan RPM.
	Filters not installed	Install filters.
	Duct static pressure lower than design	Reduce fan RPM.
Excessive Vibration and Noise	Damaged/Unbalanced wheel	Replace wheel.
	Misaligned pulleys	Align pulleys.
	Fan is operating in unstable region of fan curve	Refer to performance curve for fan.
	Bearings need lubrication/Damaged bearing	Lubricate bearings, replace if damaged.
	Fan speed is too high	Reduce fan RPM.
	Dirty/oily belt(s)	Clean belt(s).
	Belt(s) too loose	Adjust, replace if necessary.
	Worn belt(s)	Replace belt(s).

Remote Panel Troubleshooting Chart

Light Indication	Condition	Possible Cause
No Lights	Power not available to remote panel	Incorrect voltage to unit.
		Main disconnect switch in “OFF” position.
		Circuit breaker tripped.
		Faulty main transformer.
Power Light Only	Proper unit - Off operation	No correction required.
	No power to motor starter	Manual/Off/Auto switch in “Off” position (3 position remote panels only).
		Improper damper function.
		Low temperature thermostat timed out (optional).
Power Light and Blower On Light illuminated	Proper ventilation operation	No correction required.
	No power to flame safety controller	Manual/Off/Auto switch in “Off” position (2 position remote panels only).
		Heat/vent switch in “Vent” position.
		Gas pressure switch tripped (option).
		High temperature limit thermostat tripped
		Manual/Off/Auto switch in “Auto” position and intake air thermostat not satisfied.
	Improper airflow	Excessive airflow.
		Faulty airflow switch.
		Issue with air probes and/or tubing
		Broken belt.
		Dirty air filters. Replace as needed.
All panel lights illuminated	Proper heating operation	No correction required.
Clogged Filter Light On (optional)	Clogged filters	Dirty air filters. Replace as needed.
Flame Failure Light On	Flame Safety Alarm Activated - No Flame Detected during Pilot Establishment Period	Combination valve in “Off” position (Size 1-3 Units).
		Gas valve stuck closed.
		Low or no gas pressure.
		Faulty spark electrode
		Faulty ignition transformer.
		Flame sensor failure.
		Pilot orifices clogged.

Burner Troubleshooting

Problem	Potential Cause	Corrective Action
Pilot Does Not Light/Stay Lit	Main gas is off	Open main gas valve.
	Air in gas line	Purge gas line.
	Dirt in pilot orifice	Clean orifice with compressed air.
	Gas pressure out of range	Adjust to proper gas pressure.
	Pilot valve is off	Turn pilot valve on.
	Leak at pilot orifice	Tighten pilot orifice.
	Excessive drafts	Redirect draft away from unit.
	Safety device has cut power	Check limits and airflow sensor.
	Dirty flame sensor	Clean flame sensor.
	No call for heat	Adjust heat setpoint
	No spark at igniter	Check wiring, sensor, and ignition controller. Check spark gap, refer to **Figure 24 on page 35**.
Main Burner Does Not Light (Pilot is lit)	Defective valve	Replace combination valve.
	Loose valve wiring	Check wiring to valve.
	Defective flame rod	Replace flame rod.
	Shut off valve closed	Open shut off valve.
	Defective flame safety controller	Replace flame safety controller.
	Pilot fails as main gas valve opens, and main gas flows.	Plug the first burner port next to the pilot gas tube with burner cement.
Not Enough Heat	Main gas pressure too low	Increase main gas pressure - do not exceed 14 inches wc inlet pressure(5 PSI on size 4-5 heater).
	Too much airflow	Decrease airflow if possible.
	Burner undersized	Check design conditions.
	Gas controls not wired properly	Check wiring.
	Heat setpoint too low	Increase heat setpoint.
	Broken HMI Sensor	Replace HMI.
	Unit locked into low fire	Check wiring.
Too much heat	Defective modulating gas valve	Check/replace modulating valve.
	Heat setpoint too high	Decrease heat setpoint.
	Unit locked into high fire	Check wiring.
	Broken HMI Sensor	Replace HMI.

MSC Troubleshooting

Fault	Problem	Potential Cause	Corrective Action
Feedback Fault	Feedback Fault on MSC Display	Disconnected/faulty wiring	Secure connections to fan. If faulty wiring is found, repair or replace as required.
		No feedback for 30 seconds	Check parameters
		Less than 70% of RPM	Check duct/fan for obstructions.
Modbus	Modbus fault on MSC Display	Faulty Cat 5 connection/cable	Find and replace faulty cable
		ECPM03 does not recognize device	Verify Modbus # on device is set correctly.
Variable Device Fault	Motor not responding to changes made on variable device (potentiometer)	Defective potentiometer	Replace potentiometer
		Faulty wiring to motor	Find and replace faulty wiring.
Motor not responding	Motor not functioning as expected	2-Speed switch not working	Check switch and wiring.
		Wiring to motor defective	Find and replace faulty wiring.
		Check for other faults on MSC display	If no other faults are present, motor maybe defective.

TURN OFF POWER TO THE MOTOR WHILE PROGRAMMING THIS DEVICE.

- If the device has a potentiometer or a 2-Speed switch, a jumper wire can be placed in between the 10V In and 10V Out terminals to rule out a defective device. This will cause the motor to go to HIGH SPEED.
- The IO STATUS menu can be used to verify the inputs and outputs of the device are functioning as expected.
- The FAULT HISTORY menu can be used to keep track of faults while working on the device.

Troubleshooting Flowcharts

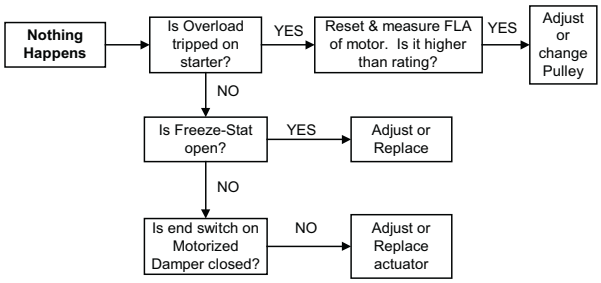

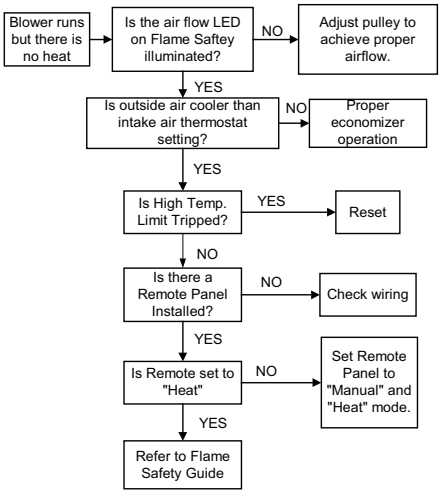

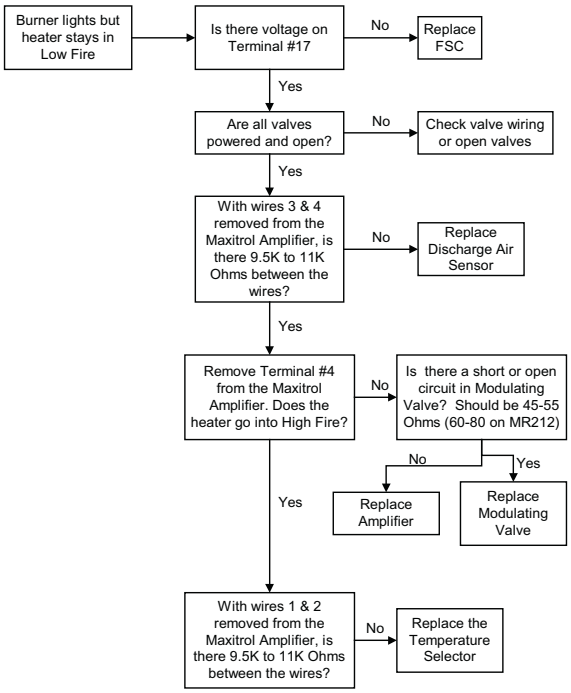

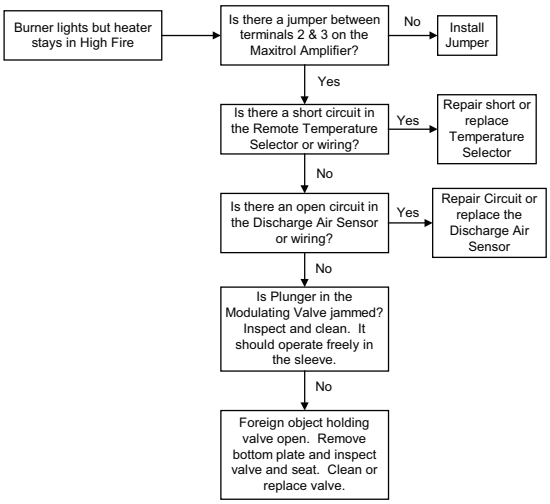

MAINTENANCE

To guarantee trouble-free operation of this heater, the manufacturer suggests following these guidelines. Most problems associated with fan failures are directly related to poor service and maintenance.

Please record any maintenance or service performed on this fan in the documentation section located at the end of this manual.

WARNING: DO NOT ATTEMPT MAINTENANCE ON THE HEATER UNTIL THE ELECTRICAL SUPPLY HAS BEEN COMPLETELY DISCONNECTED AND THE MAIN GAS SUPPLY VALVE HAS BEEN SHUT OFF.

General Maintenance

1. Fan inlet and approaches to ventilator should be kept clean and free from any obstruction.
2. All fasteners and electrical connections should be checked for tightness each time maintenance checks are performed before restarting unit.
3. These units require very little attention when moving clean air. Occasionally oil and dust may accumulate, causing imbalance. If the fan is installed in a corrosive or dirty atmosphere, periodically inspect and clean the wheel, inlet, and other moving parts to ensure smooth and safe operation.
4. Motors are normally permanently lubricated. **Caution: Use care when touching the exterior of an operating motor. Components may be hot enough to burn or cause injury.**
5. If bearings require lubrication, very little is needed. A general rule is one-half pump from a grease gun for 1/2” to 1-7/16” shaft diameters and one full pump for 1-11/16” and large diameter shafts for every 1500 to 3000 hours of operation. A lithium-based grease should be used. Bearings should be rotated as they are lubricated to evenly distribute the grease, either by hand or via extended grease lines. Do not attempt to grease bearings from inside the enclosure while the motor is energized. **Caution: Bearings are sealed, over-greasing can cause damage to the bearings. Do not grease until grease comes out of seals. Only add the appropriate amount of grease.**

2 Weeks After Start-up

1. Belt tension should be checked after the first 2 weeks of fan operation. **See “Pulley Alignment/ Proper Belt Tension” on page 29.**
2. All fasteners should be checked for tightness each time maintenance checks are performed before restarting unit.

Every 3 Months

1. Belt tension should be checked quarterly. **See “Pulley Alignment/Proper Belt Tension” on page 29.** Over-tightening will cause excessive bearing wear and noise. Too little tension will cause slippage at start-up and uneven wear.
2. Filters need to be cleaned and/or replaced quarterly, and more often in severe conditions. Washable filters can be washed in warm soapy water. When re-installing filters, be sure to install with the **airflow in the correct direction** as indicated on the filter.

Yearly

1. Inspect bearings for wear and deterioration. Replace if necessary.
2. Inspect belt wear and replace torn or worn belts.
3. Inspect bolts and set screws for tightness. Tighten as necessary.
4. Inspect motor for cleanliness. Clean exterior surfaces only. Remove dust and grease from the motor housing to ensure proper motor cooling. Remove dirt from the wheel and housing to prevent imbalance and damage.
5. Check for gas leak and repair if present.
6. Clean flame sensor by rubbing with steel wool to remove any rust build-up.
7. Inspect burner assembly. Refer to **“Burner Maintenance” on page 49**.

Burner Maintenance

1. Verify the unit is off.
2. Inspect the pilot assembly, refer to **“Pilot Adjustment” on page 31**. Replace if required.
3. Inspect the burner plates.
4. Clean the burner plates. Make sure the baffles are secure and attached to the burner.
5. Clean burner with wire brush and make sure the burner ports are free of debris. Refer to **Table 9** for drill size(s) to clear ports. Wipe the burner with a clean rag.
6. After cleaning the system, turn the system. Visually inspect the flame.

Table 9 - Burner Orifice Drill Size

Orifice	Drill Size
Gas Port	1/8”
Air Port	42

Re-Setting of the Unit

If the flame safety control is locked out (alarm light on), reset the unit by:

1. Turn OFF power to the unit.
2. Turn power to the unit back ON.

Emergency Shutdown of Unit

To shutdown the unit in the event of an emergency, do the following:

1. Turn power OFF to the unit from main building disconnect.
2. Turn the external disconnect switch to the OFF position.
3. CLOSE the inlet gas valve located on the heater.

Prolonged Shutdown of the Unit

For prolonged shutdown, the following steps should be done:

1. Turn the external disconnect switch to the OFF position.
2. CLOSE the inlet gas valve located on the heater.

To re-start the unit, the following steps should be done:

1. Turn the external disconnect switch to the ON position.
2. OPEN the inlet gas valve located on the heater.

Unit Filters

Table 10 - Filter Quantity

Intake	16” x 20”	20” x 25”
Size 1 Standard Sloped	2	-
Size 2 Standard Sloped	-	2
Size 1 Modular Sloped	3	-
Size 2 Modular Sloped	-	3
Size 3 Modular Sloped	6	-
Size 4 Modular Sloped	10	-
Size 5 Modular Sloped	-	8
Size 1 V-Bank	-	3
Size 2 V-Bank	8	-
Size 3 V-Bank	-	8
Size 4 V-Bank	15	-
Size 5 V-Bank	-	12

Notes

Start-Up and Maintenance Documentation

START-UP AND MEASUREMENTS SHOULD BE PERFORMED AFTER THE SYSTEM HAS BEEN AIR BALANCED AND WITH THE HEAT ON (Warranty will be void without completion of this form)

Job Information

Job Name		Service Company	
Address		Address	
City		City	
State		State	
Zip		Zip	
Phone Number		Phone Number	
Fax Number		Fax Number	
Contact		Contact	
Purchase Date		Start-up Date	

Heater Information

Refer to the start-up procedure in this manual to complete this section.

Name Plate and Unit Information		**Field Measure Information**	
Model Number		Motor Voltage	
Serial Number		Motor Amperage**	
Hardware Rev.		RPM	
Software Rev.		Burner Differential Pressure	Inches WC
Motor Volts		Pilot Flame Signal	VDC
Motor Hertz		Low Fire Flame Signal	VDC
Motor Phase		High Fire Flame Signal	VDC
Motor FLA		High Fire Inlet Gas Pressure	Inches WC
Motor HP		Low Fire Manifold Gas Pressure	Inches WC
Blower Pulley		High Fire Manifold Gas Pressure	Inches WC
Motor Pulley		Thermostat Set Point	
Belt Number		Gas Type	
Min. Btu/Hr			
Max. Btu/Hr			
Gas Type			

Temperature Control	Discharge	
	Space	
Airflow Direction	Correct	
	Incorrect	

**If measured amps exceed the FLA rating on the nameplate, fan RPM must be reduced to decrease the measured amps below the nameplate FLA rating.

Maintenance Record

Date	Service Performed